WHITNEY-JENSEN AIRCRAFT TOOLS

WHITNEY METAL TOOL CO.
99 FORBES STREET • ROCKFORD, ILL.

FRONT COVER

INSIDE FRONT COVER

WHITNEY-JENSEN AIRCRAFT TOOLS
for PUNCHING • FORMING • RIVETING

CONTENTS

	Page Numbers	
Aircraft Rivet Squeezers		2-7
Standard	2	
Redi-Set	3	
Alligator	4	
Crab	5	
Snake Head	5	
Pelican	6	
Rivet Squeezer Assembly Parts	7	
Blind Rivet Pullers		8-9
Hand Punches		10-13
No. 5 Jr.	10	
Nos. 7, 7½ and 8-Imperial	11	
No. 10	12	
No. 11	12	
No. 12	13	
Bench Punches		14-16
Nos. 16 and 17	14	
No. 20	15	
Nos. 24 and 25	16	
Small Tools		17-20
No. 113 Ratchet Handle	17	
No. 119 Ratchet Handle	17	
Rivet Sets	18	
Riveting Sets	19	
Scratch Awls	20	
Scratch Pins	20	
Angle Iron Machinery		21-27
No. 50 Mitre Notcher—No. 51 Bender	21	
No. 60 Mitre Notcher	22	
No. 61 Bender	23	
No. 4 Shear	24	
No. 62 Shear	25	
No. 455 Combination	26	
No. 53 Universal Bender	27	
Power Squaring Shears		28-29
Toggle Action Foot Presses		30-33
Nos. 28 and 29	30-31	
Nos. 58 and 68 Deep Throat	32-33	
Power Punch Presses—Nos. 129 and 130		34-35
Bending Brakes		36-47
Portable "Air Conditioning Special"	36-37	
18 Gauge Combination	38-39	
Roller Bearing Bending and Box Brakes	40-42	
Standard Forming Moulds	43	
Special Forming Moulds	44-46	
Distinguishing Features	47	
Press Brakes		48

Page 1

WHITNEY METAL TOOL CO.

MANUFACTURERS • 99 FORBES STREET • ROCKFORD, ILLINOIS

STANDARD AIRCRAFT RIVET SQUEEZER

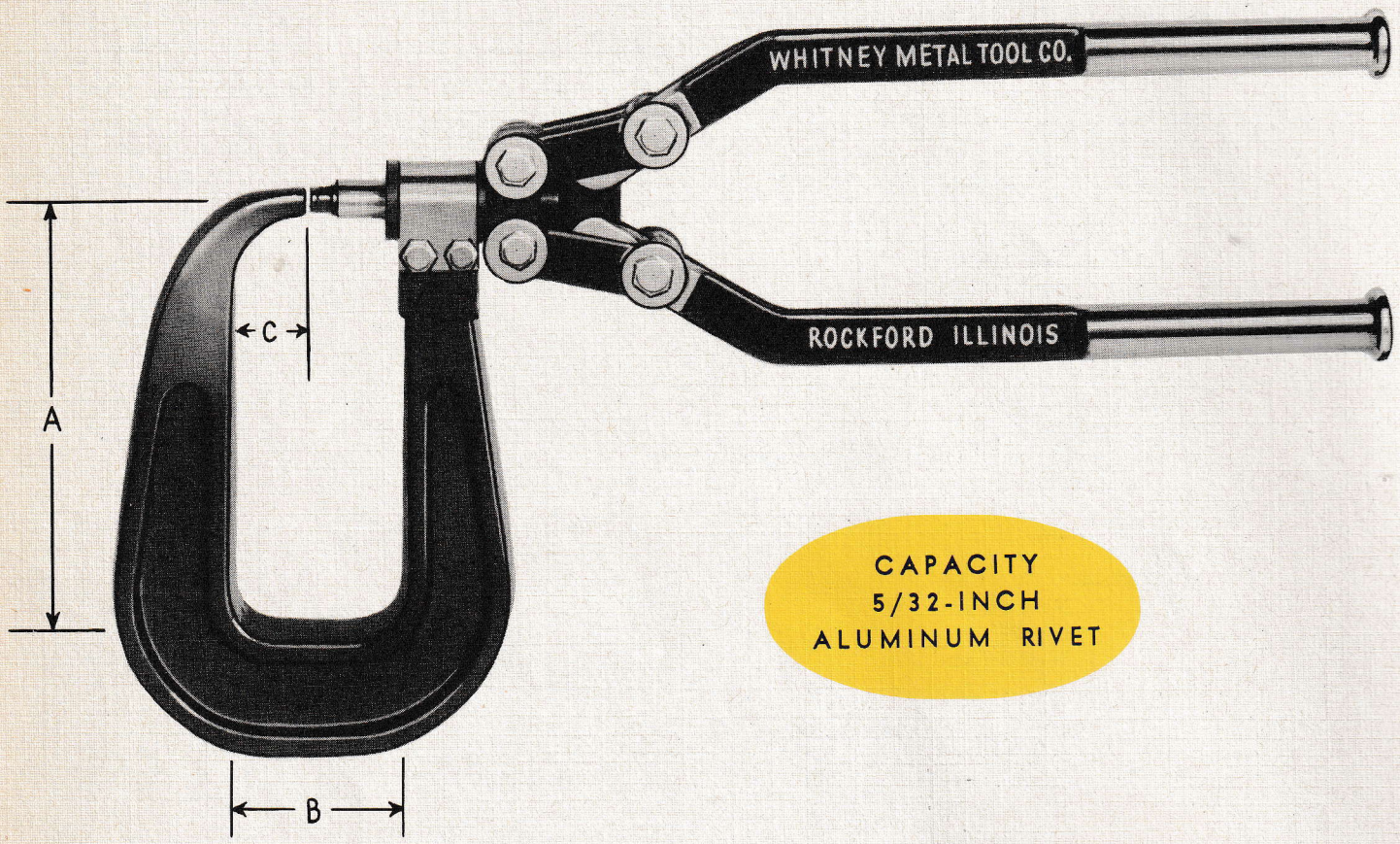

CAPACITY
5/32-INCH
ALUMINUM RIVET

SPECIFICATIONS

NUMBER	A DIMENSION	B DIMENSION	C DIMENSION	OPENING BETWEEN JAWS	APPROXIMATE WEIGHT
1	1-3/4"	1-3/4"	11/16"	7/8"	5¾ lbs.
2	2-1/2"	1-3/4"	11/16"	1-1/8"	6 lbs.
3	3-1/2"	1-3/4"	7/16"	7/8"	7 lbs.
4	2-7/8"	1-3/8"	9/16"	5/8"	6½ lbs.
5	6"	1-3/4"	11/16"	1-1/8"	10¼ lbs.
6	4"	1-3/4"	7/16"	1-1/8"	7½ lbs.
7	5"	1-3/4"	7/16"	1-1/8"	9 lbs.
8	8"	2-9/16"	7/16"	1-15/16"	13 lbs.
9	10"	2-13/16"	7/16"	2-3/16"	15 lbs.
10	12"	2-13/16"	7/16"	2-3/16"	17 lbs.

Dies can be furnished for 3/32", 1/8" or 5/32" Aluminum Rivets — Brazier, Flat or Round Head. Spindle dies are interchangeable. Lower die set in frame is stationary. When ordering specify size and style of rivet or send sample of rivet.

REDI-SET AIRCRAFT RIVET SQUEEZER

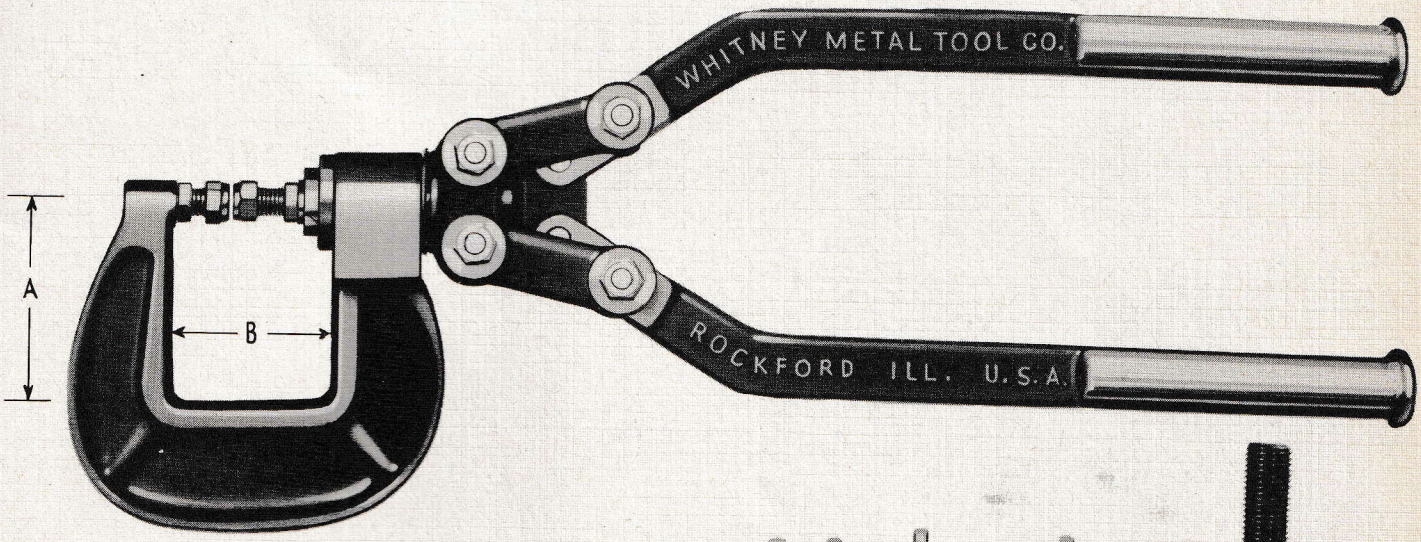

CAPACITY
5/32-INCH
ALUMINUM RIVET

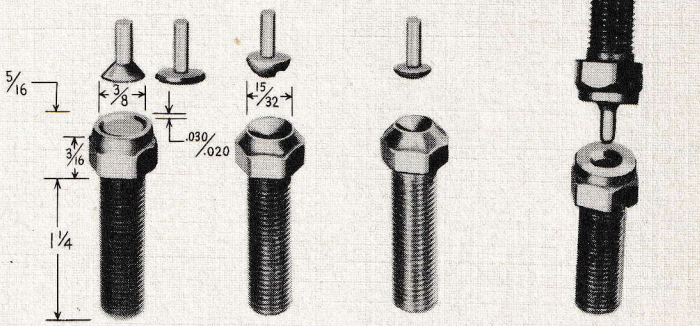

FLAT HEAD | ROUND HEAD | BRAZIER HEAD | COUNTERSINKING FOR FLUSH RIVETING

SPECIFICATIONS

NUMBER	A DIMENSION	B DIMENSION	APPROXIMATE WEIGHT
DA-1	1-3/4"	2"	6 lbs.
DA-2	2-1/2"	2"	6½ lbs.

Dies can be furnished for 3/32", 1/8", 5/32" Aluminum Brazier, Flat or Round head rivets. Countersinking dies for Flush riveting can also be furnished. Both the spindle and lower dies are interchangeable. When ordering specify size and style of rivet or send sample of rivet.

ALLIGATOR AIRCRAFT RIVET SQUEEZER

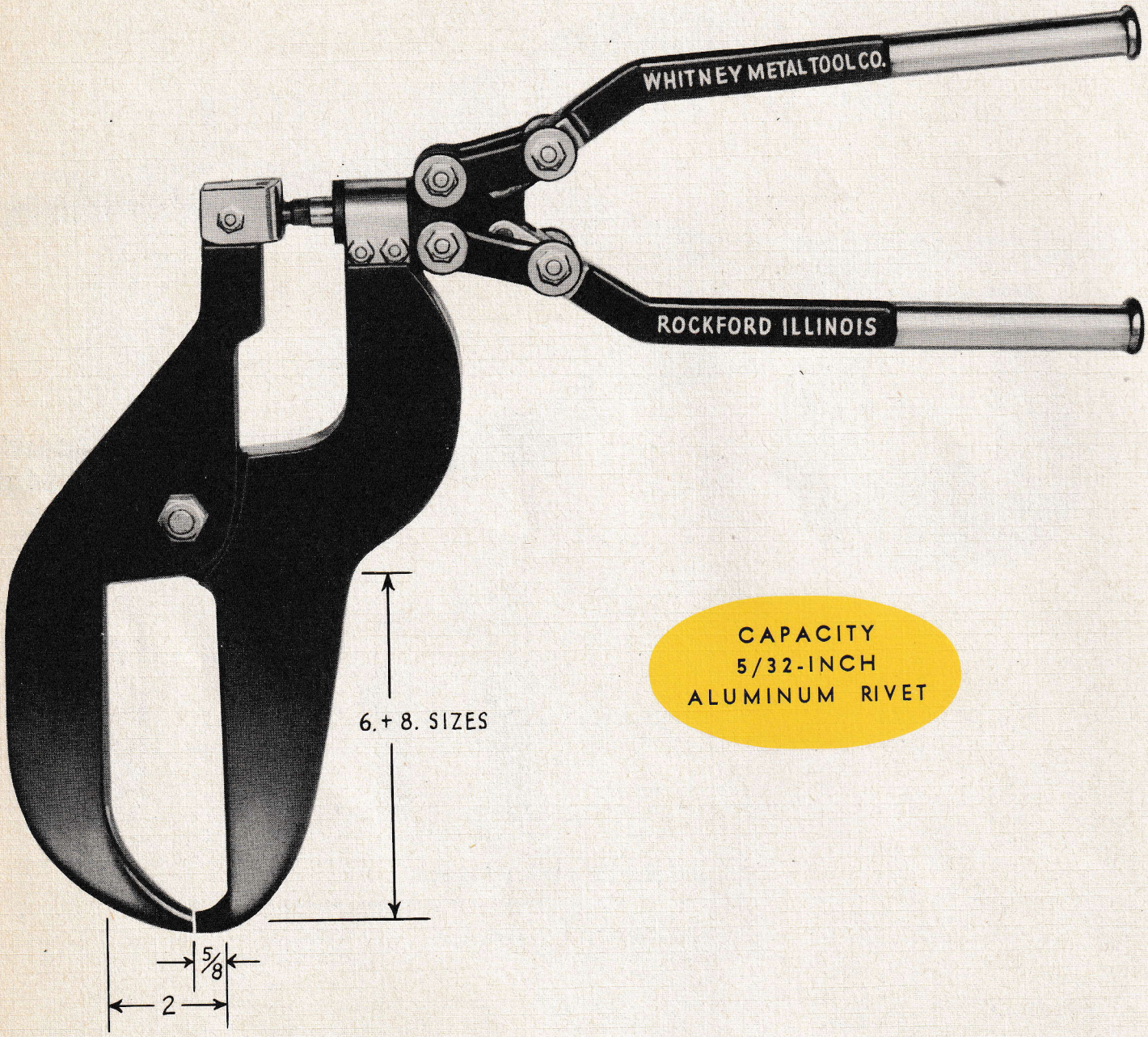

CAPACITY
5/32-INCH
ALUMINUM RIVET

SPECIFICATIONS

NUMBER	STYLE	THROAT DEPTH	OPENING BETWEEN JAWS	APPROXIMATE WEIGHT
Gz-6	Offset	6"	1-1/8"	18½ lbs.
Gz-6	Offset	8"	1-1/8"	21 lbs.

Tool can be furnished for 3/32", 1/8" or 5/32" Aluminum Rivets — Brazier, Flat or Round Head. Dies are not interchangeable. When ordering specify size and style of rivet to be used or send sample of rivet.

CRAB AIRCRAFT RIVET SQUEEZER

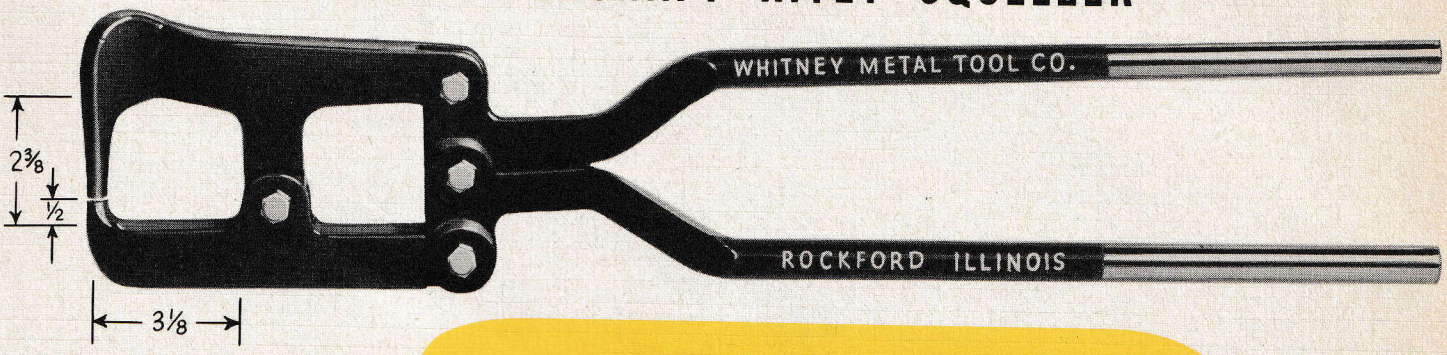

CAPACITY 5/32-INCH ALUMINUM RIVET

SPECIFICATIONS

NUMBER	STYLE	THROAT DEPTH	APPROXIMATE WEIGHT
Gz-7	Right Hand	3-1/8"	13 lbs.
Gz-7	Left Hand	3-1/8"	13 lbs.

Tool can be furnished for 3/32", 1/8" or 5/32" Aluminum Rivets — Brazier, Flat or Round Head. Dies are not interchangeable. When ordering specify size and style of rivet to be used or send sample of rivet.

SNAKE HEAD AIRCRAFT RIVET SQUEEZER

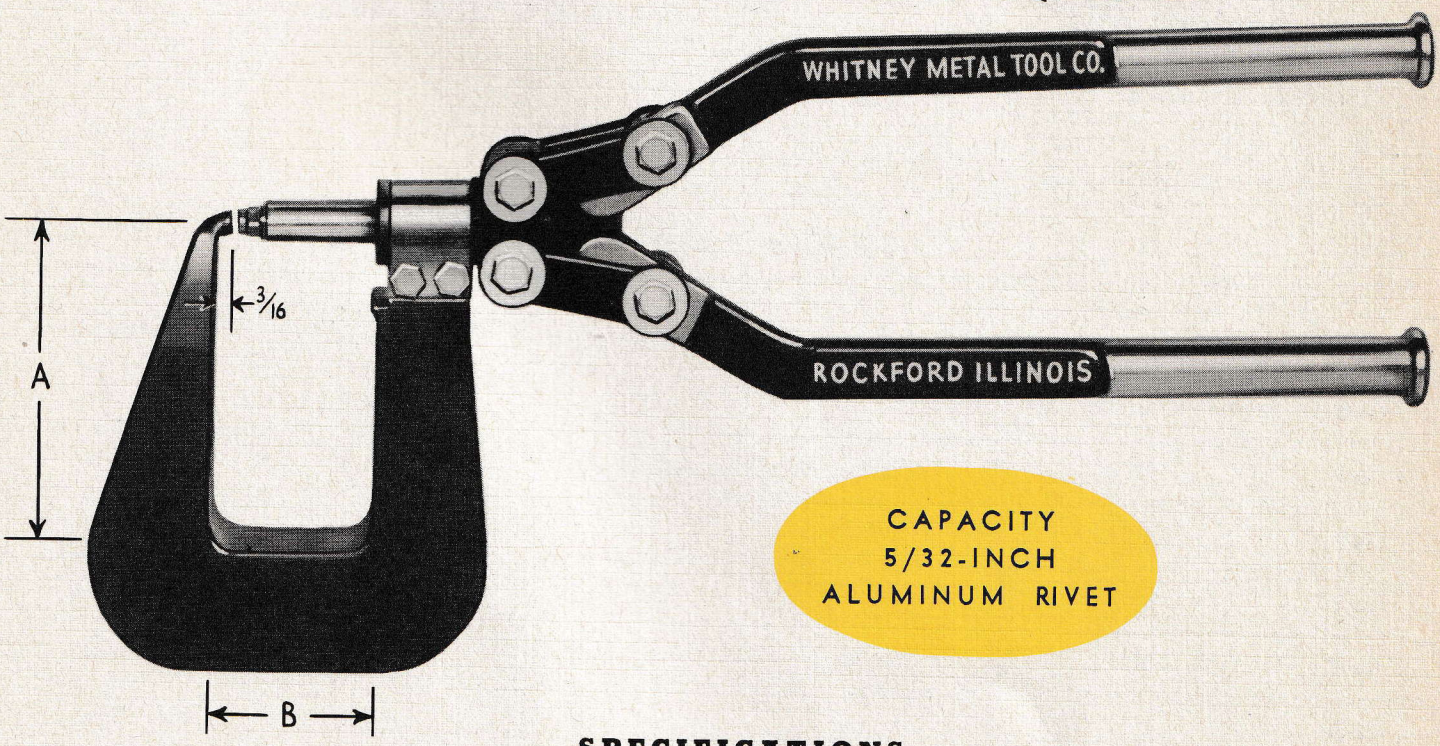

CAPACITY
5/32-INCH
ALUMINUM RIVET

SPECIFICATIONS

NUMBER	SIZE OF ANVIL	A DIMENSION	B DIMENSION	OPENING BETWEEN JAWS	APPROXIMATE WEIGHT
Gz-3-11	2-1/2"	2-1/2"	1-1/4"	7/8"	8½ lbs.
Gz-3-12	4"	4-1/4"	2-5/16"	1-15/16"	12 lbs.

Dies can be furnished for 3/32", 1/8" or 5/32" Aluminum Rivets — Brazier, Flat or Round Head. Spindle dies are interchangeable. Lower die set in frame is stationary. When ordering specify size and style of rivet or send sample of rivet.

PELICAN AIRCRAFT RIVET SQUEEZER

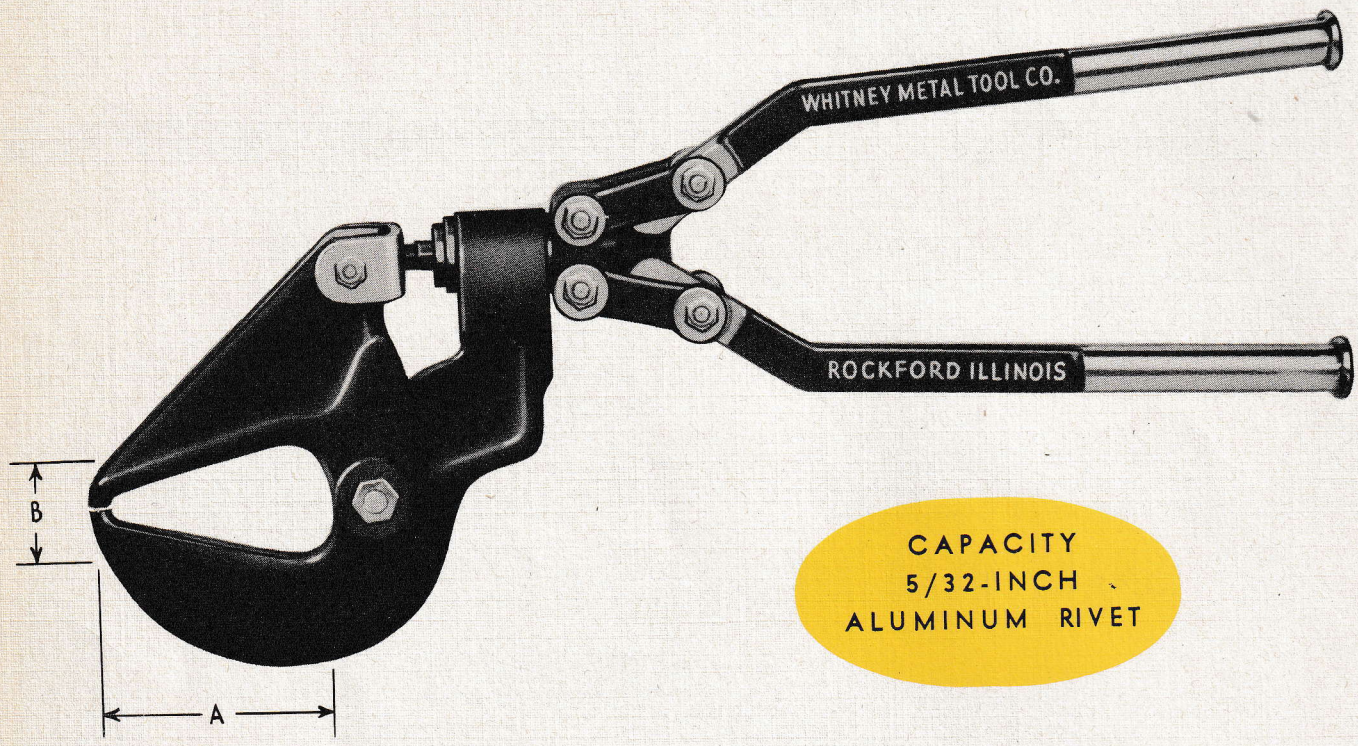

CAPACITY
5/32-INCH
ALUMINUM RIVET

SPECIFICATIONS

NUMBER	SIZE	A DIMENSION	B DIMENSION	OPENING BETWEEN JAWS	APPROXIMATE WEIGHT
Gz-5	1-3/4"	1-5/8"	1"	3/4"	7½ lbs.
Gz-5	2-1/2"	2-7/8"	1-1/2"	1-1/8"	8½ lbs.
Gz-5	3-1/2"	3-3/4"	1-3/4"	1-1/8"	9½ lbs.
Gz-5	4"	4-1/4"	1-3/4"	1-1/8"	11 lbs.
Gz-5	5"	5-1/4"	1-1/2"	1-1/8"	12 lbs.
Gz-5	6"	6-1/4"	1-1/2"	1-1/8"	15 lbs.

Tool can be furnished for 3/32", 1/8" or 5/32" Aluminum Rivets — Brazier, Flat or Round Head. Dies are not interchangeable. When ordering specify size and style of rivet to be used or send sample of rivet.

AIRCRAFT RIVET SQUEEZER ASSEMBLY PARTS

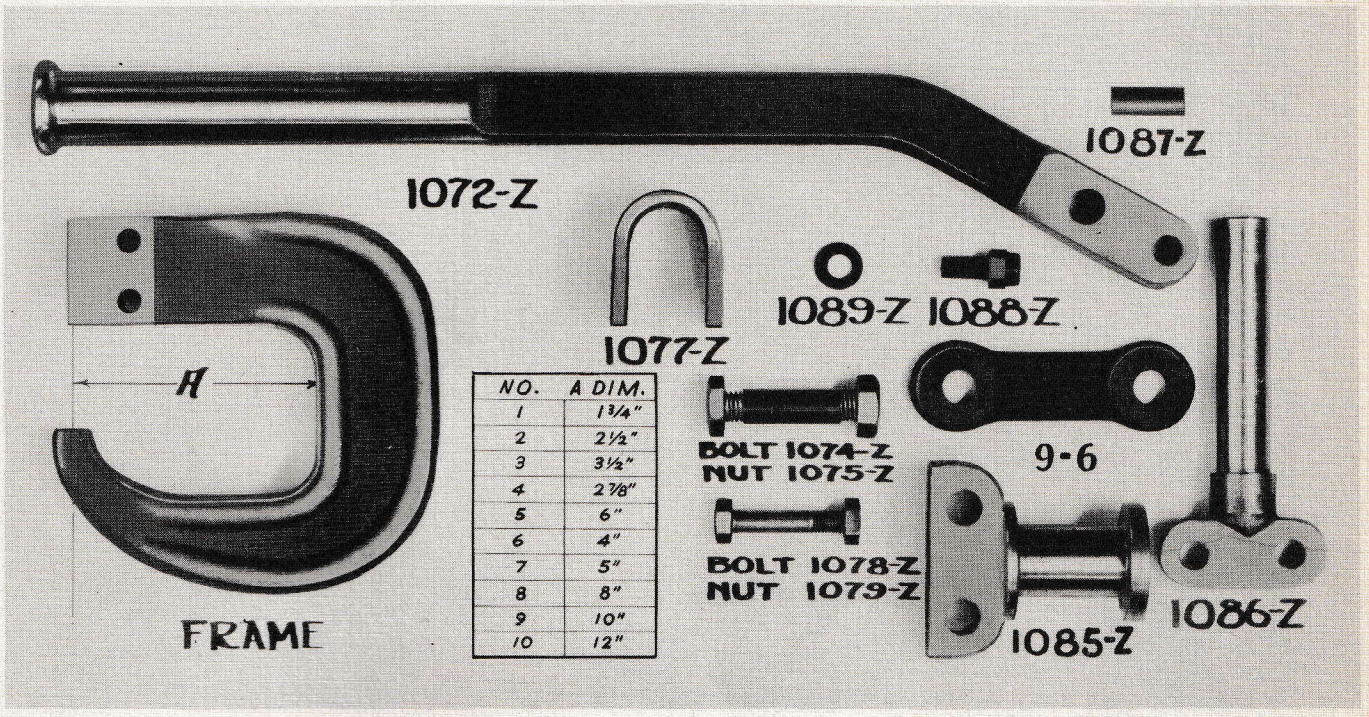

NO.	A DIM.
1	1¾"
2	2½"
3	3½"
4	2⅞"
5	6"
6	4"
7	5"
8	8"
9	10"
10	12"

PARTS LIST

PART NO.	PART NAME	NO. REQUIRED
9-6	Side Link	4
1072-Z	Handle	2
1074-Z	Handle Link Bolt	4
1075-Z	Handle Link Bolt Nut	4
1077-Z	Anvil Yoke	1
1078-Z	Yoke to Frame Bolt	2
1079-Z	Yoke to Frame Bolt Nut	2
1085-Z	Spindle Spool	1
1086-Z	Spindle	1
1087-Z	Handle and Spindle Pins	2
1088-Z	Spindle Die	1
1089-Z	Spindle Die Washer	1

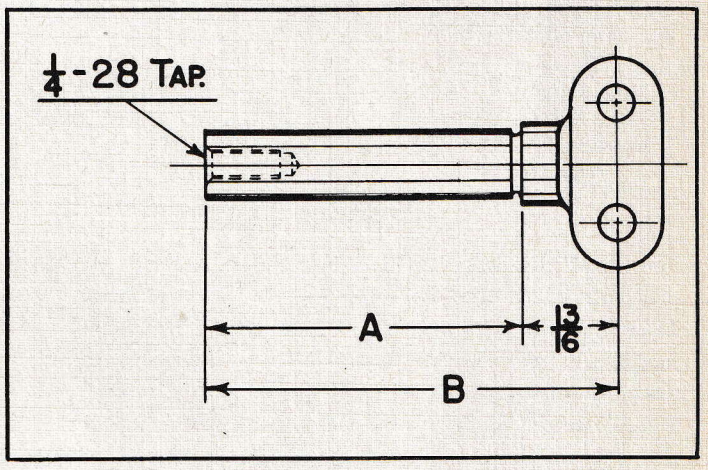

SPECIFICATIONS

PART NO.	A Dimension	B Dimension	FRAMES USED ON	Throat Height
1086-Z-1	2-5/8"	3-7/16"	1, 2 and 3 Standard; All Sizes Pelican and Alligator	1-5/64"
1086-Z-2	2-7/8"	3-11/16"	5, 6 and 7 Standard	1-21/64"
1086-Z-3	3-7/16"	4-1/4"	Special	1-15/16"
1086-Z-4	3-11/16"	4-1/2"	8 and 12 Standard; All Sizes Snake Head	2-1/8"
1086-Z-5	3-15/16"	4-3/4"	10 Standard	2-3/8"
1086-Z-6	2-3/8"	3-3/16"	4 Standard	53/64"
1086-Z-7	2-9/16"	3-3/8"	11 Standard	1-1/16"

DIRECT CENTER PULL

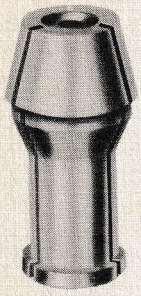

Fig. 1-A—Chuck—See Table Showing Part Numbers, Etc.

Fig. 1-B—Knurled Slip Ring—Part No. G742-14

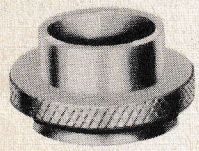

Fig. 1-C—Coupling Nut—Part No. G742-15

Fig. 1-D—Retainer Spring—Part No. G742-16

An important feature in the construction of our Chuck is that it is made to pull directly on the center and have a full bearing around the head of the rivet.

The Chuck is illustrated in Fig. 1 and consists of Chuck Proper (1-A), Knurled Slip Ring (1-B), Coupling Nut (1-C), and Retainer Spring (1-C).

Draw Bar Fingers are shown in Fig. 2.

CHUCK SPECIFICATIONS

PART NO.	CAPACITY INCHES	RIVET TYPE
G742-17	1/8	Brazier
G742-18	5/32	Brazier
G742-19	3/16	Brazier
G742-20	1/8	Flush
G742-21	5/32	Flush
G742-22	3/16	Flush

When Ordering Please Use Above Numbers

CHUCK AND DRAW BAR FINGER ARRANGEMENT

If you are using three sizes of brazier and flush head rivets (for instance: 1/8", 5/32" and 3/16" sizes) you will require six Chucks and three Draw Bar Fingers. This is necessary because a specific Chuck is needed for each size brazier rivet to be used and for each size flush rivet to be used.

A specific Draw Bar Finger is required for each diameter of rivet to be used, but the style of rivet does not affect the Draw Bar Fingers.

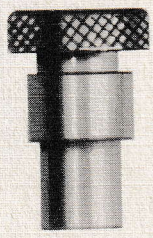

Fig. 2-A—Stop Plug—Part No. G742-11

REMOVAL OF PARTS FOR CHANGE-OVER

The Chuck is removed by loosening the two Set Screws in Body of Puller, which permit the Chuck to slip out.

To remove the Draw Bar Finger, loosen Knurled Stop Plug, which is right-hand threaded. This releases the Finger and it may then be pulled out from the Chuck end of the Puller.

DRAW BAR FINGER SPECIFICATIONS

PART NO.	RIVET DIAMETER
G742-23	1/8 inch
G742-24	5/32 inch
G742-25	3/16 inch

When Ordering Please Use Above Numbers

Fig. 2-B—Draw Bar Finger—See Table Showing Part Numbers, etc.

HOW TO USE

Turn Crank Handle to the left as far as it will go (See Fig. 3). This places the Puller Fingers in proper position for pulling rivet. Then pull Knurled Slip Ring toward Body of Puller, which will open the Three-Jaw Chuck. Insert the rivet in the Chuck, then raise Knurled Slip Ring toward front end of Chuck to hold the rivet. It is now ready to use. To set rivet turn Crank Handle to right (clockwise) until rivet has been properly pulled into position. When the inner stem of the rivet has broken loose from the rivet body it is properly set.

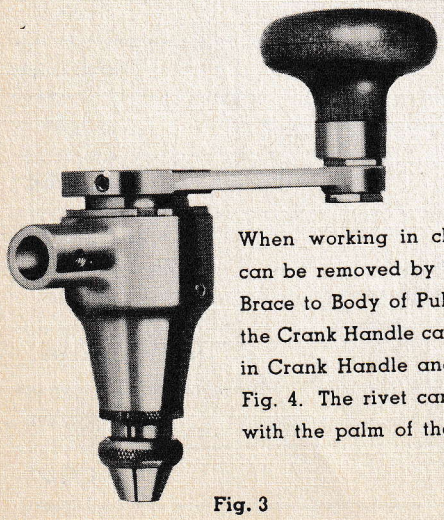

Fig. 3

CLOSE CORNER WORK

When working in close quarters the brace-like Handle can be removed by loosening the Set Screw which holds Brace to Body of Puller. If you are still limited for space the Crank Handle can be taken off by loosening Set Screw in Crank Handle and applying Hand Wheel as shown in Fig. 4. The rivet can be set by turning this Hand Wheel with the palm of the hand.

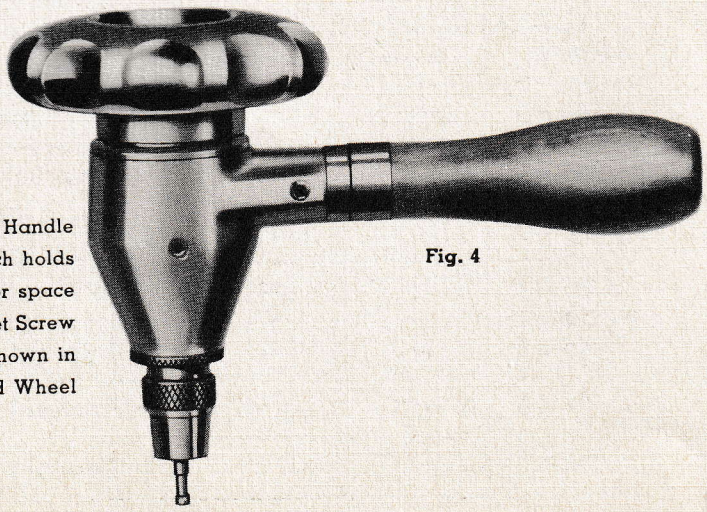

Fig. 4

WHITNEY-JENSEN G742 BLIND RIVET PULLER

Capacity 1/8", 5/32", 3/16"
Weight 4 Pounds
Height Overall, With Brace Handle, 15"
Height Overall, Without Brace Handle, 7"

PAT. PENDING

Interchangeable Chucks Available for Flush or Brazier Blind Rivets

•

See Specification Table

In designing the Whitney-JENSEN G742 Rivet Puller we have been very careful to guard our reputation for building durable tools; therefore we have incorporated our Ball Bearing feature.

The Ball Bearing feature decreases friction and increases speed.

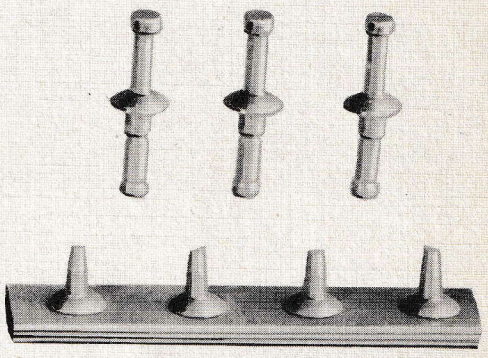

Above are typical of the rivets which can be applied with the aid of the Whitney-JENSEN G742 Blind Rivet Puller. Other types of rivets may be applied with this highly efficient tool, all without the use of a bucking bar.

NO. 5 JR. PUNCH

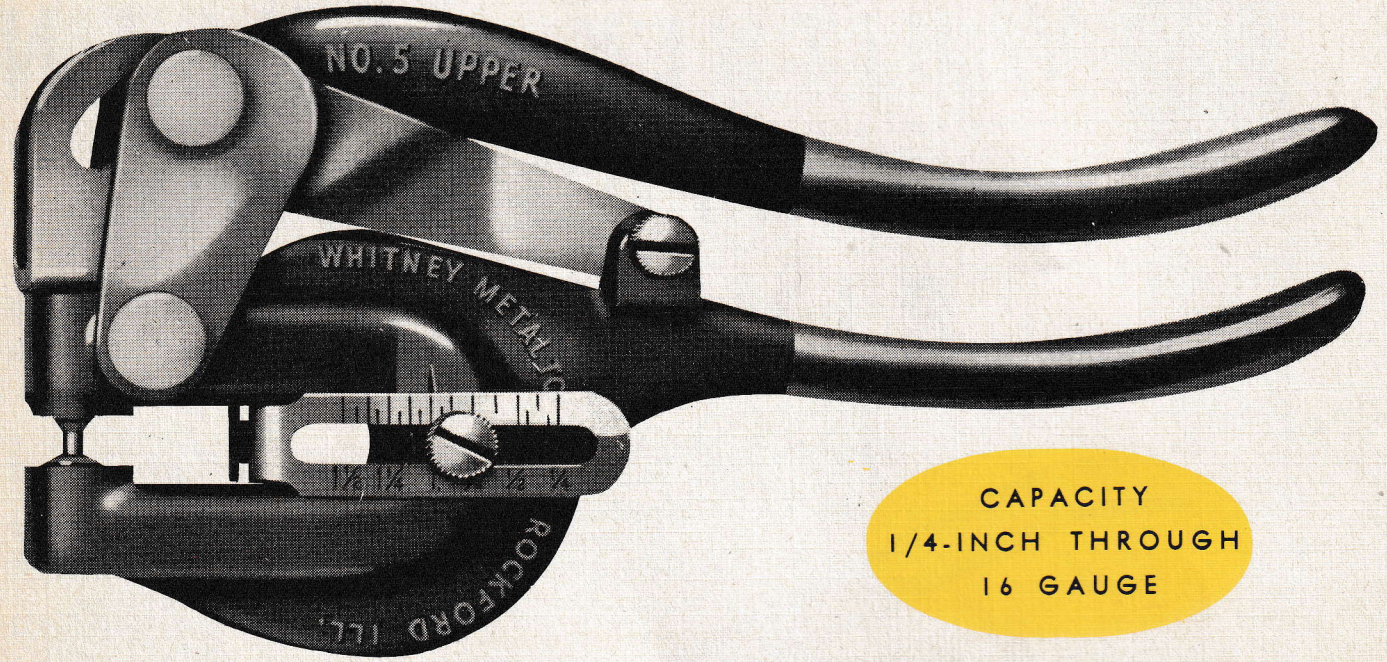

CAPACITY
1/4-INCH THROUGH
16 GAUGE

WHY THE WHITNEY-JENSEN No. 5 JR. PUNCH PRESS IS BETTER

1—POWERFUL IN OPERATION — These punches will exert a pressure several times greater than any other punch of similar weight.

2—LIGHT IN WEIGHT — Compare them with other punches intended for work of similar capacity.

3—PARTS ARE STANDARD—All parts are standardized. Replacements are instantly obtainable. Whitney-Jensen punches wear longer.

4—EASY TO USE — All punches are made with centre points, enabling operator to locate required position immediately. No skill required to operate.

5—COST — The Whitney-Jensen No. 5 Jr. Punch should pay for itself on the first few jobs. A number of times our punches have paid for themselves on the first job.

6—GUARANTEE — All Whitney-Jensen punches are fully guaranteed to do the work for which they are specified. Any part shown to be defective will be replaced immediately.

NOTE DEPTH OF THROAT

We are the originators of this type punch and it still leads the world. We build tools that last longer, and are sold and carried in stock in every city in the United States, also Canada and England. Be sure it is a Whitney-Jensen No. 5 Jr. Punch.

Weight	2¾ Lbs.
Throat depth	2 Inches
Punch in center	4 Inches
Length over all	8½ inches
Height of Gap	¼ Inch

This tool is furnished complete with seven sets of punches and dies, 3/32", 1/8", 5/32", 3/16", 7/32", 1/4", and 9/32" or any stock size specified.

We also furnish any size punch and die from 1/16" to 9/32" by 1/64"

Complete with one punch and die in tool and six punches and dies in a cannot lose-out container. Packed in a metal case.

NOS. 7, 7½ AND 8-IMPERIAL PUNCHES—ROLLER BEARING

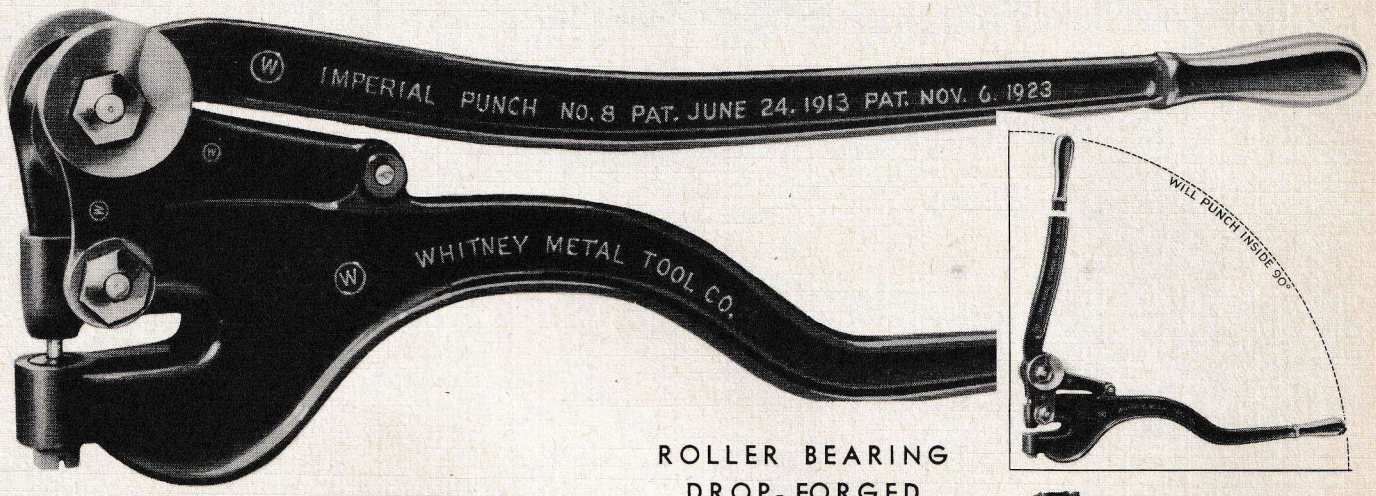

ROLLER BEARING
DROP-FORGED
NO CAMS TO WEAR

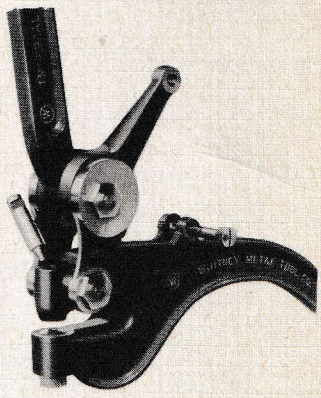

This popular type punch is made in three sizes. Will work inside 90 degrees. Quick changing of Punches and Dies. No lever to become disengaged by moving too far in either direction. No cams to wear out. Stripping positive.

Sizes of Punches and Dies which can be furnished:

For the No. 7 and No. 7½ Roller Bearing Punch —
1/8" to 7/16" by 1/64".

For the No. 8 Imperial Punches—
1/8" to 1/2" by 1/32".

Punches for the No. 7½ Punch are the same as the ones used in our No. 8-Imperial Punch and the dies the same as used in our No. 7.

UNIVERSAL BASE FOR NOS. 7, 7½ AND 8-IMPERIAL PUNCHES

These convenient swivel bases have a series of holes drilled and tapped in table for clamping on various locating stops in duplicating holes.

Size of holes tapped in Tables are for ¼"-20 U. S. S. Screws.

Size of Table for No. 7	3" x 5"
Size of Table for No. 7½	3½" x 5"
Size of Table for No. 8	3¾" x 5"
Weight No. 7 Base	6¼ lbs.
Weight No. 7½ Base	8 lbs.
Weight No. 8 Base	9¾ lbs.

SPECIFICATIONS

	No. 7 Punch	No. 7½ Punch	No. 8 Punch
Capacity	¼" Through ⅛"	¼" Through 3/16"	¼" Through ¼"
Weight	6½ lbs.	10½ lbs.	16 lbs.
Punch in Center of	3½ in.	4 in.	4¼ in.
Length Over All	18 in.	22 in.	25½ in.
Height of Gap	½ in.	⅜ in.	⅜ in.

NO. 10 BALL BEARING PUNCH

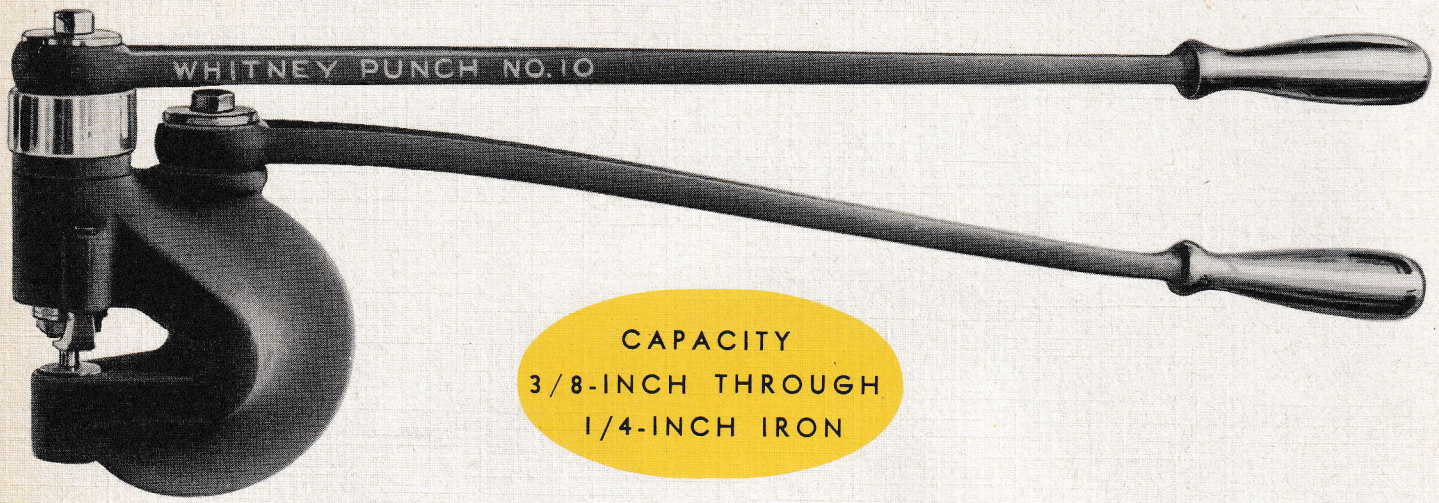

CAPACITY
3/8-INCH THROUGH
1/4-INCH IRON

Weight	8½ lbs.
Depth of Throat	1⅝ inches
Height of Throat	⅞ inches
Length over all	19 inches

Tool furnished complete with one punch and die of specified size. We furnish any size punch and die from 1/8" to 1/2" by 1/32".

We can also furnish a ratchet handle for these machines. Base furnished with these make them very practical for bench purposes.

THESE MACHINES WILL ALSO DRIVE RIVETS

NO. 11 BALL BEARING PUNCH

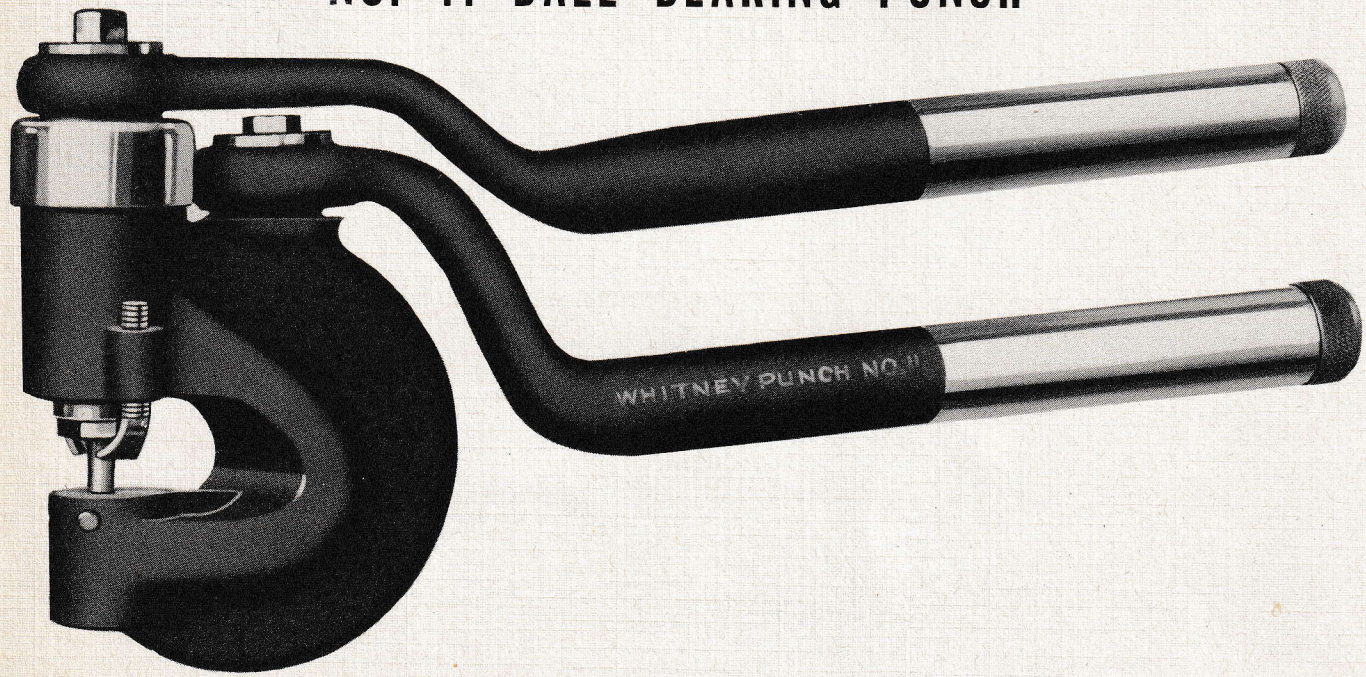

No. 11 punch is an exact duplicate of No. 10 except it has tubular handles, so that extra punches and dies can be carried in the handles. Is so designed the lower handle is in line with the throat which makes it faster when punching light material.

NO. 12 BALL BEARING PUNCH

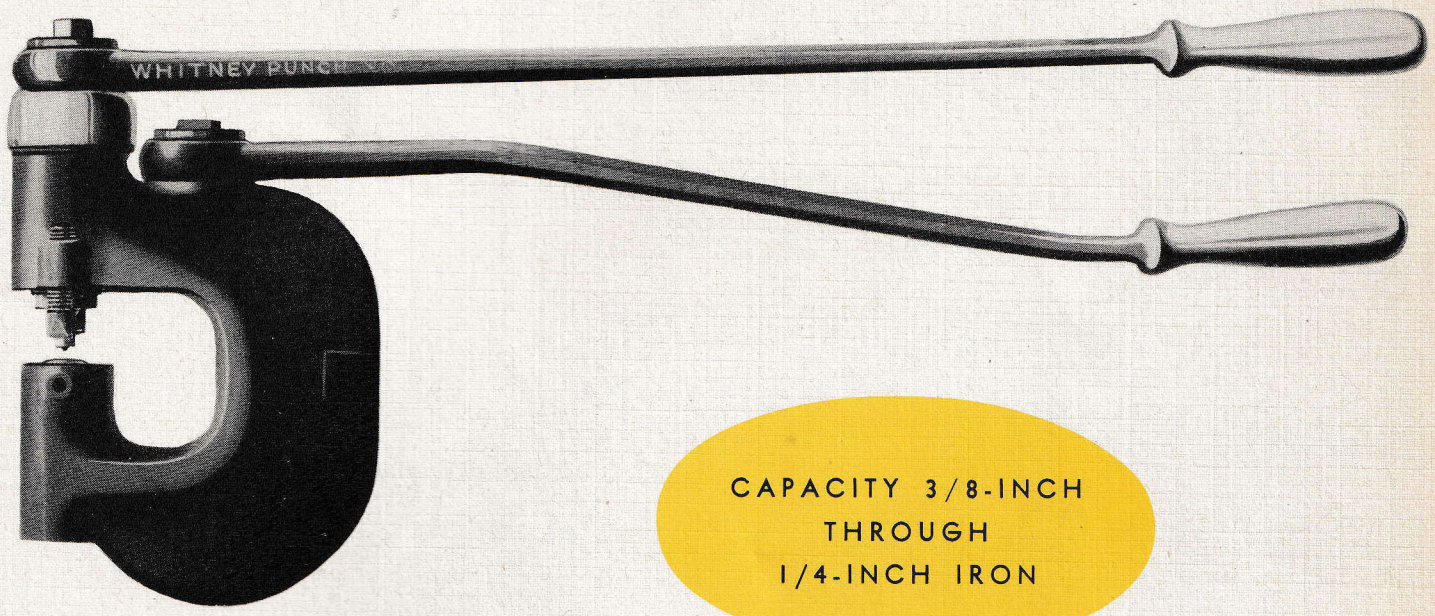

CAPACITY 3/8-INCH
THROUGH
1/4-INCH IRON

Weight	11 lbs.
Depth of Throat	2 inches
Height of Throat	2 inches
Length over all	18 inches

Tool furnished complete with one punch and die of specified size. We furnish any size punch and die from 1/8" to 1/2" by 1/32".

THIS MACHINE WILL DRIVE RIVETS

We can also furnish a ratchet handle for the above machine.

Base available for use with our No. 12 Ball Bearing Punch makes it very practical for bench purposes.

NOS. 16 AND 17 BENCH PUNCHES

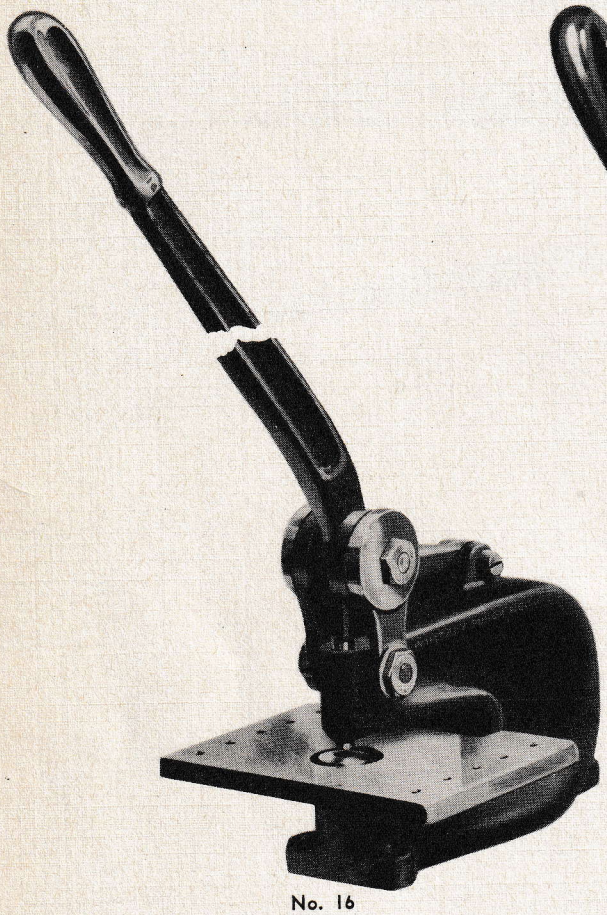

No. 16

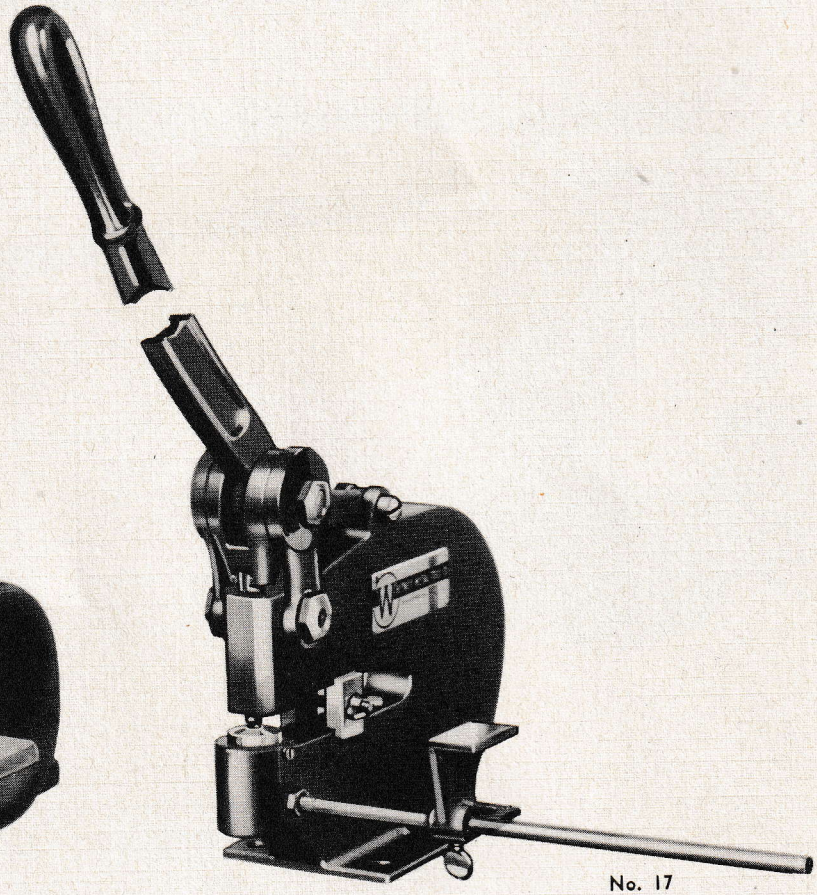

No. 17

SPECIFICATIONS

	No. 16	No. 17
Capacity, Commercial Iron	3/8" thru 1/4"	1/4" thru 1/4"
Weight with Work Table	32 1/2 lbs.	43 lbs.
Weight without Work Table	28 lbs.	38 lbs.
Depth of Throat	3 1/2 inches	6 1/2 inches
Height of Throat	3/8 inches	1 1/8 inches
Length of Handle	22 inches	22 inches

Tools shipped with three punches and dies; unless specified we ship 7/32", 9/32", 11/32".

Stock sizes for both models are from 1/8" to 9/16" by 1/32".

These machines are ideal Bench Punches, having liberal throat clearance; very powerful; operator works in front of machine; convenient table can be furnished which has holes tapped for 1/4" x 20 machine screws and is machined accurately on three sides and surface; size of table, 6" x 8".

NO. 20 BALL BEARING PUNCH

CAPACITY 1/2-INCH
THROUGH
1/2-INCH IRON

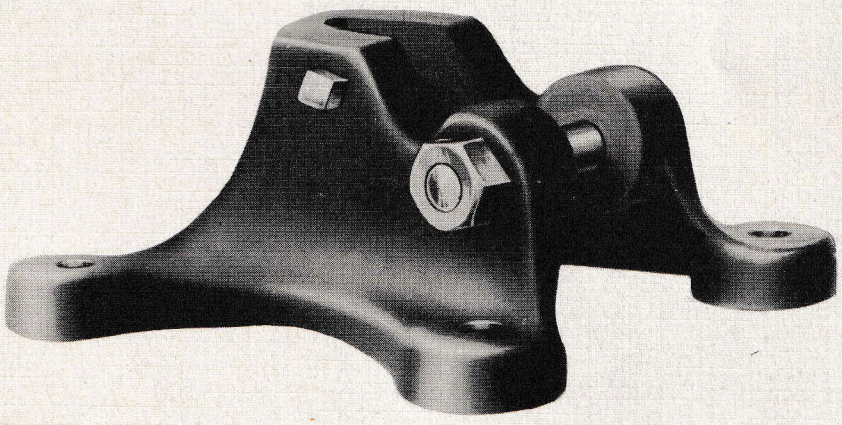

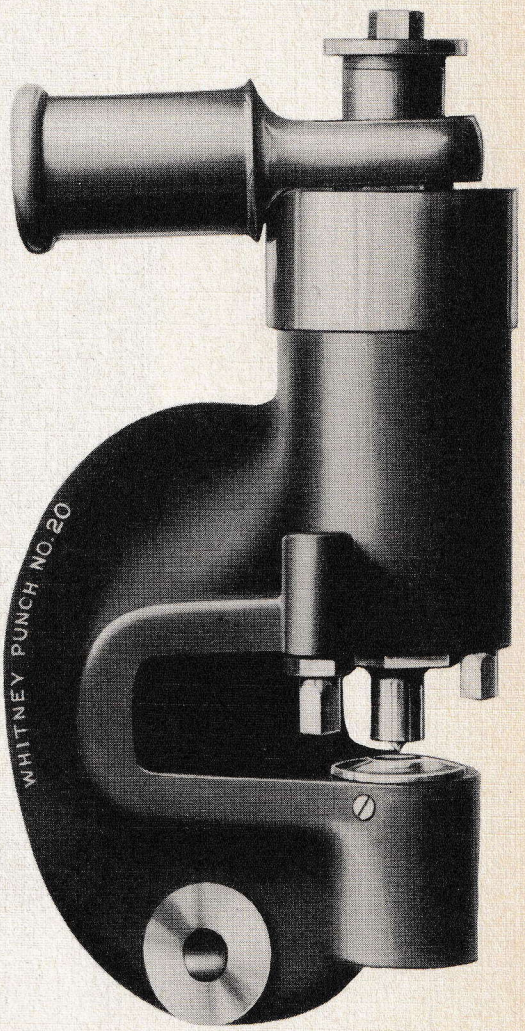

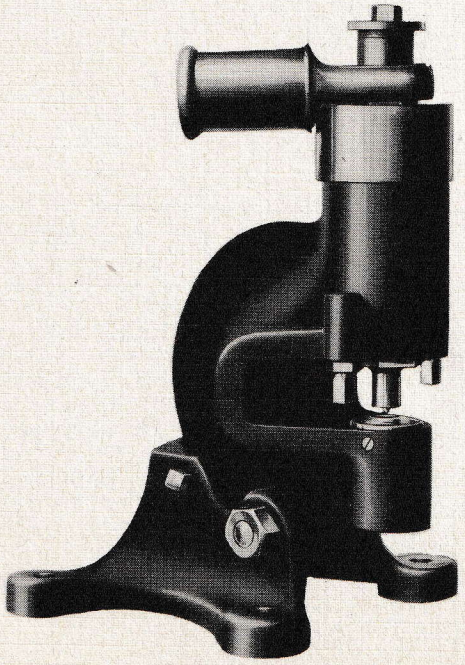

Weight.....20 lbs.
Depth of Throat.....2 inches
Height of Throat.....1 3/8 inches

Tool furnished complete with one punch and die of specified size. We furnish any size punch and die from 3/16" to 11/16" by 1/32".

Bevel Dies to compensate the bevel on I-Beam should be used when punching in flange of I-Beam.

THIS MACHINE WILL ALSO DRIVE RIVETS

It is made of alloy steel and heat treated throughout.

NOS. 24 AND 25 BALL BEARING PUNCHES

SPECIFICATIONS

	No. 24	No. 25
Capacity, Commercial Iron	1/2" thru 3/8"	3/8" thru 3/8"
Weight	45 lbs.	120 lbs.
Depth of Throat	3 1/2 inches	8 inches
Will Punch in Center of	7 inches	16 inches
Height of Throat	4 inches	4 inches

Tools furnished with one punch and die of specified size.
Stock sizes are from 3/16" to 11/16" by 1/32".
Punch body is made of special steel casting.

NO. 113 RATCHET HANDLE

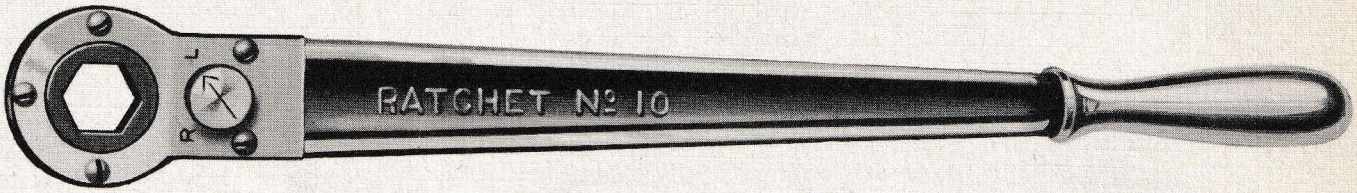

Length, 19 Inches
Weight, 2½ Lbs.

No. 113 ratchet handle can be used in connection with the No. 10, 11, and 12 Ball Bearing Punches.

THESE HANDLES ARE MADE OF FIRST CLASS MATERIAL AND WORKMANSHIP IS OF THE BEST

NO. 19 RATCHET HANDLE

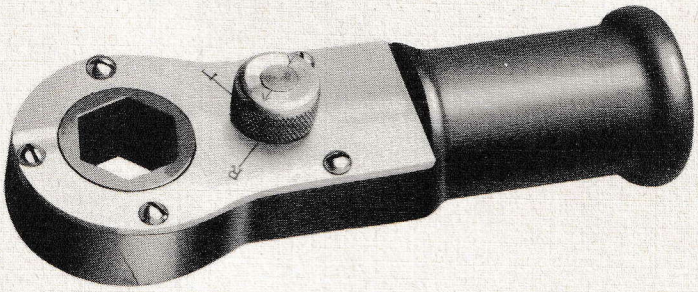

Length, 7 Inches
Weight, 3 Lbs.

No. 19 ratchet handle can be used in connection with the following machines: Nos. 20, 24, 25 and 50.

They will ratchet in either direction or can be used neutral.

A gas pipe or round bar can be inserted into the ratchet socket handle No. 19 for additional leverage.

HAND FORMING RIVET SETS

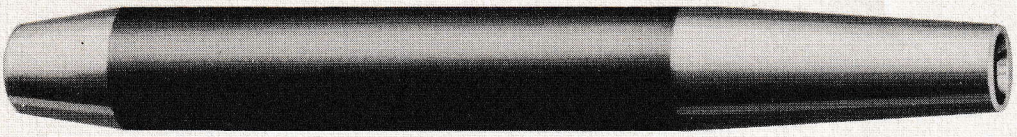

SPECIFICATIONS

RIVET SIZES	TYPE HEAD
3/32"	Brazier and Round
1/8"	Brazier and Round
5/32"	Brazier and Round
3/16"	Brazier and Round

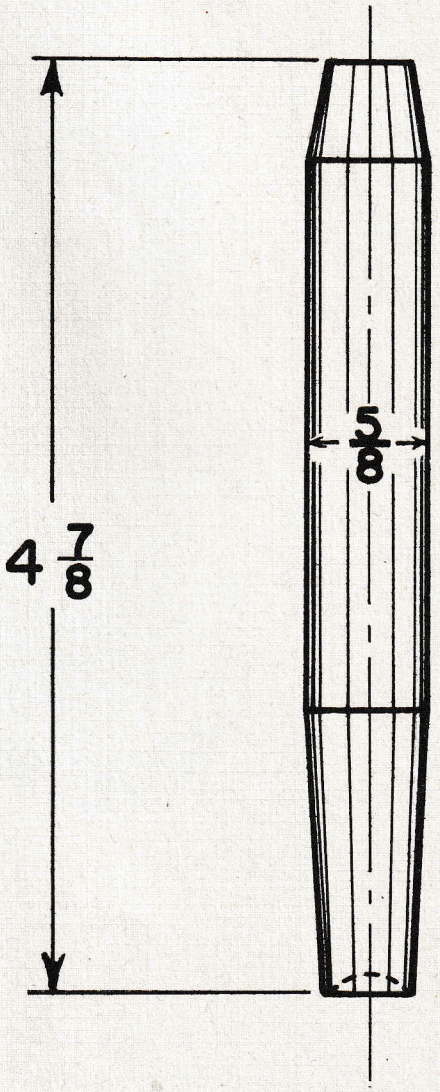

WHEN ORDERING SEND SAMPLES OF THE RIVETS YOU INTEND TO USE

Whitney-JENSEN Rivet Sets have been designed to meet the most rigid requirements. They are properly heat treated which eliminates distortion of rivet cups and mushrooming of rivet shanks. These sets come with highly polished cup surfaces.

WHITNEY-JENSEN RIVETING SETS

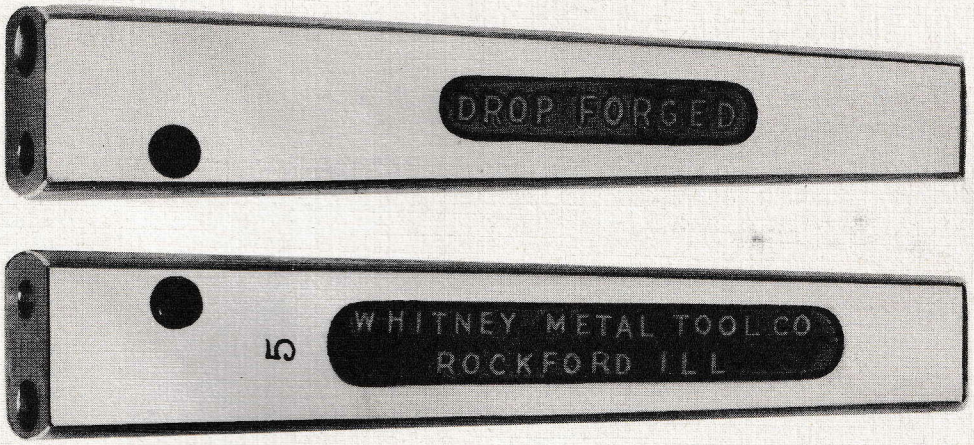

WHITNEY rivet sets are drop-forged from the highest grade steel available, shaped and made to satisfactorily fill every requirement of hard service and abuse. Specially adapted for workers in copper, brass, sheet steel, etc.

THE SAME DEGREE OF ACCURACY AND WORKMANSHIP USED IN ALL WHITNEY TOOLS WILL BE FOUND IN WHITNEY-JENSEN RIVET SETS.

SIZE	SIZE HOLE, INCHES	SIZE DRILL, GAUGE NO.	FOR IRON RIVETS LBS.	FOR COPPER RIVETS NOS.	FOR COPPER RIVETS INCHES
00	5/16	5/16	14 & 16	--------	--------
0	9/32	9/32	10 & 12	5	1/4
1	15/64	15/64	7 & 8	6	7/32
2	.2130	3	6	7	3/16
3	.1910	11	4 & 5	8	5/32
4	.1660	19	3 & 3-1/2	9	9/64
5	.1495	25	2 & 2-1/2	10 & 11	1/8
6	.1405	28	1-1/2 & 1-3/4	12	7/64
7	.1285	30	1 & 1-1/4	13 & 14	3/32
8	.1100	35	10 & 12 Oz.	15	3/32

SCRATCH AWLS—A-1 DROP FORGED

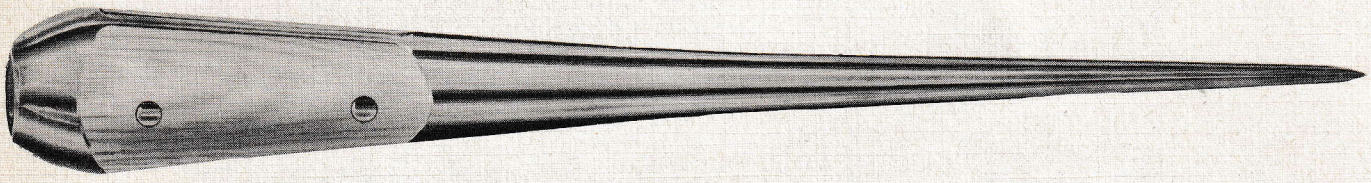

Length, 9 Inches
Weight, 6 Oz.

This is not only a Scratch Awl, but a drift pin as well for lining up holes.

Made from special high grade steel.

THESE TOOLS ARE MADE RIGHT . . .
WILL TAKE LOTS OF PUNISHMENT

WHITMETAL SCRATCH PINS

Diameter, 3/8 Inch Length, 8 Inches
Weight, 3 Oz.

These Scratch Pins are made from high grade tool steel.

NO. 50 ANGLE IRON MITRE NOTCHER AND NO. 51 ANGLE IRON BENDER

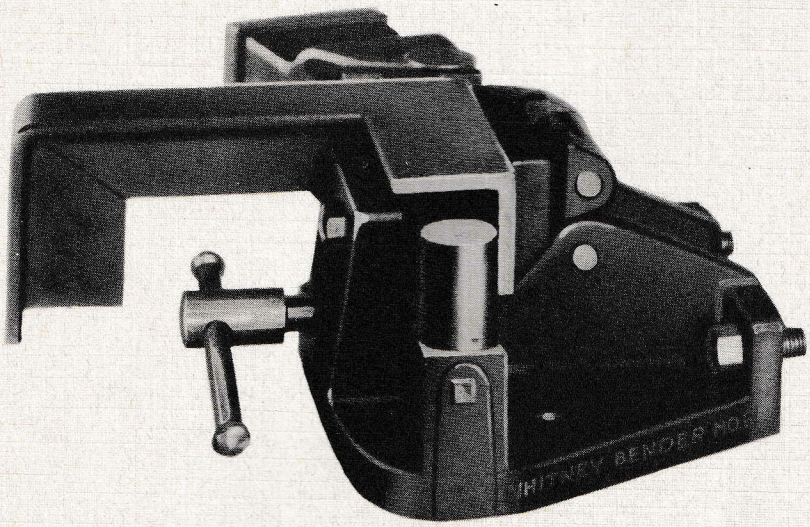

No. 51

CAPACITY
2" x 2" x 1/4"
ANGLE IRON
OR
SMALLER

Weight
of Mitre Notcher
only
55 lbs.

●

Weight
of Mitre Notcher
Bender only
43 lbs.

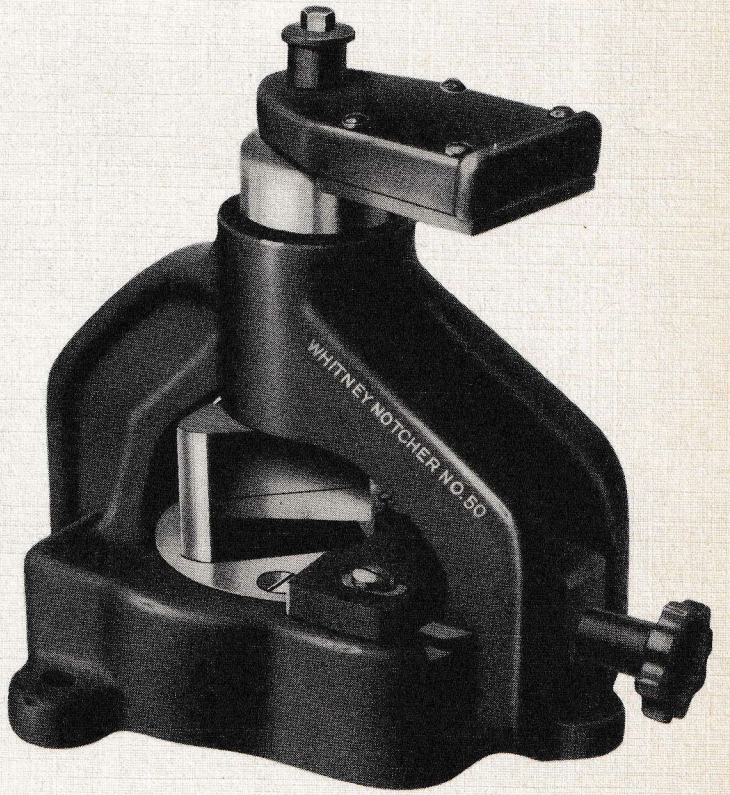

No. 50

The No. 50 Machine is furnished with a 90 degree Notching Punch and Die as regular equipment. All other sizes are special. Will cope all size of angles to 2" x 2" x 1/4".

The No. 51 Machine bends flats as well as angles.

NO. 50 HAS BALL BEARING SPINDLE

NO. 60 ANGLE IRON MITRE NOTCHER

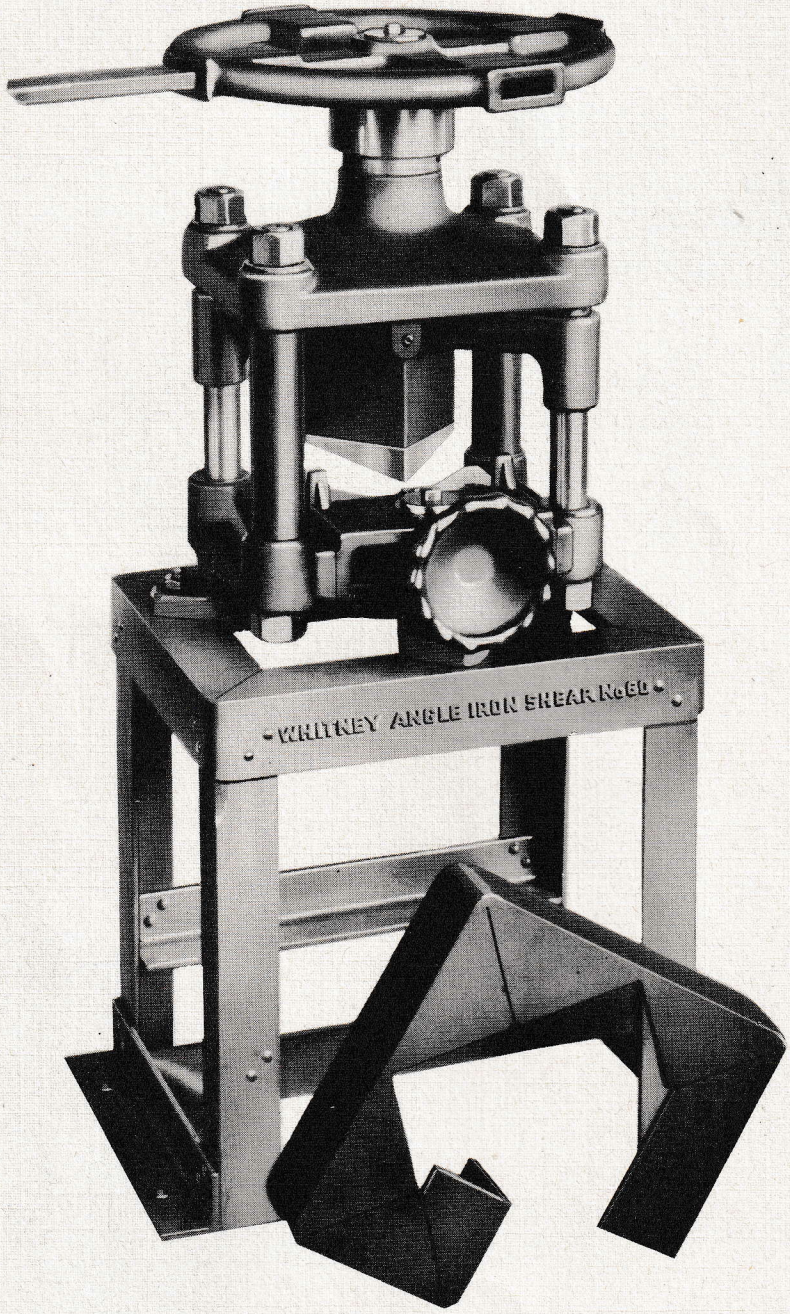

CAPACITY
3'' x 3'' x 3/8''
ANGLE IRON
OR SMALLER

WEIGHT
250 LBS.

The No. 60 Machine is furnished with a 90 degree Notching Punch and Die as regular equipment. All other sizes are special. Will cope all sizes of angles to 3'' x 3'' x 3/8''.

The above Angle Iron Mitre Notcher is equipped with Ball Bearing Spindle, Ball Bearing End Thrust, Socket Operating Handle, Screw Clamping Device, inserted Tool Steel Shearing Blades. Punch enters die by means of guide pins. Parts interchangeable.

NO. 61 ANGLE IRON BENDER

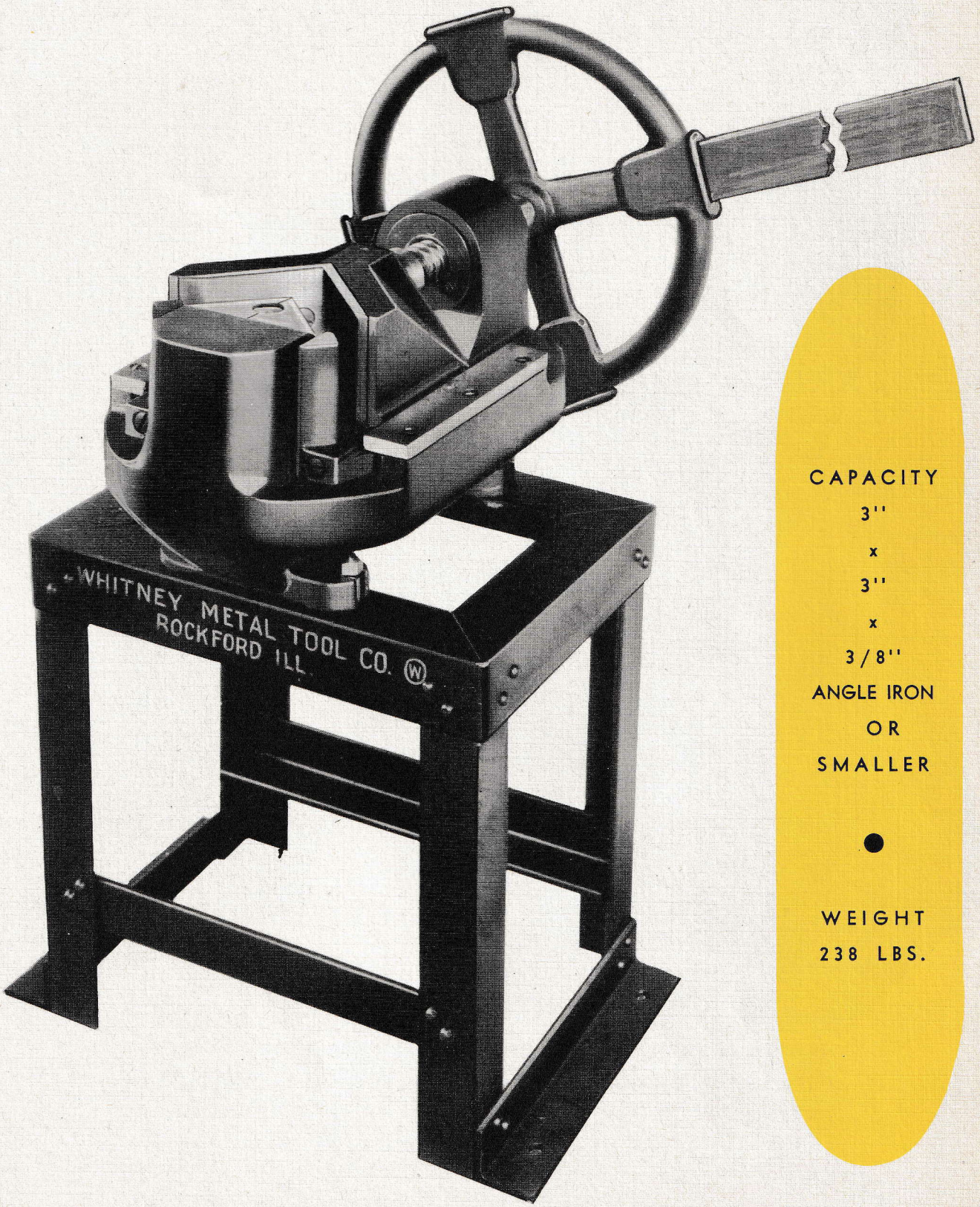

CAPACITY
3''
x
3''
x
3/8''
ANGLE IRON
OR
SMALLER

WEIGHT
238 LBS.

This machine can be used for bending most any shape by using special jaws to suit; such as flats, angles, T-iron, etc.

NO. 4 ANGLE IRON SHEAR

CAPACITY
2" x 2" x 1/4"
ANGLE IRON

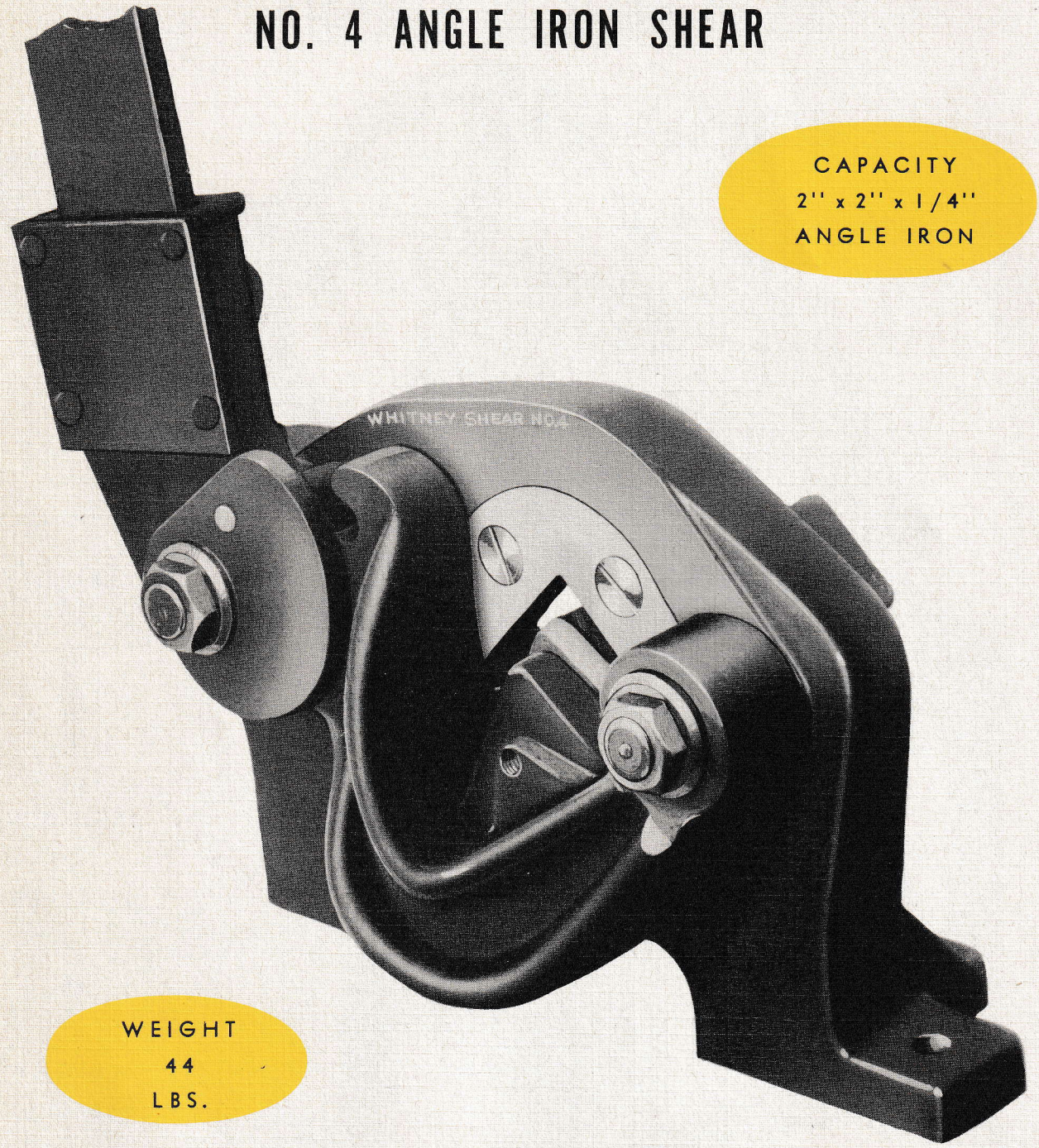

WEIGHT
44
LBS.

Above shear has inserted tool steel blades and also self-clamping rest pad, and is provided with adjusting screw for cutting light angles off square, adjusting screw at end of self-supporting pad, no clamping being necessary. It has equal distribution of leverage over the entire surface of the cutting blades on account of eccentric gear. Material in this shear is of the highest grade. All wearing parts heat treated throughout. Manufactured in drill jigs and fixtures so that all parts are interchangeable.

NO. 62 ANGLE IRON SHEAR

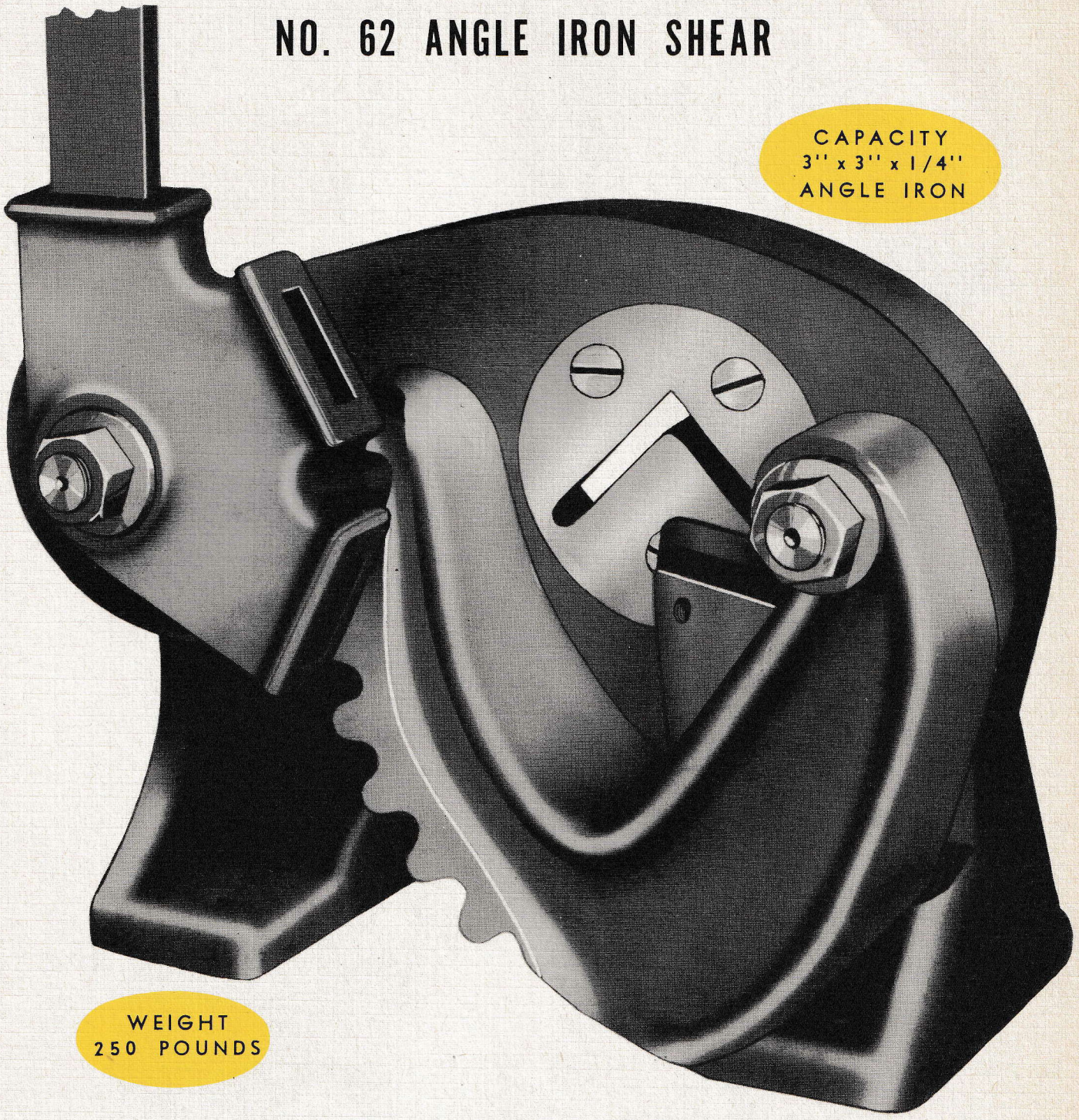

This Shear will distort the refuge end of the angle but it only requires a few blows with a hammer to straighten same. This distortion cannot be avoided with this construction. The shear, however, is meeting with approval, as we are receiving repeat orders.

Above Shear is built on the same principle as our famous No. 4 Angle Iron Shear only it being heavier and more powerful.

NO. 455 ANGLE IRON COMBINATION

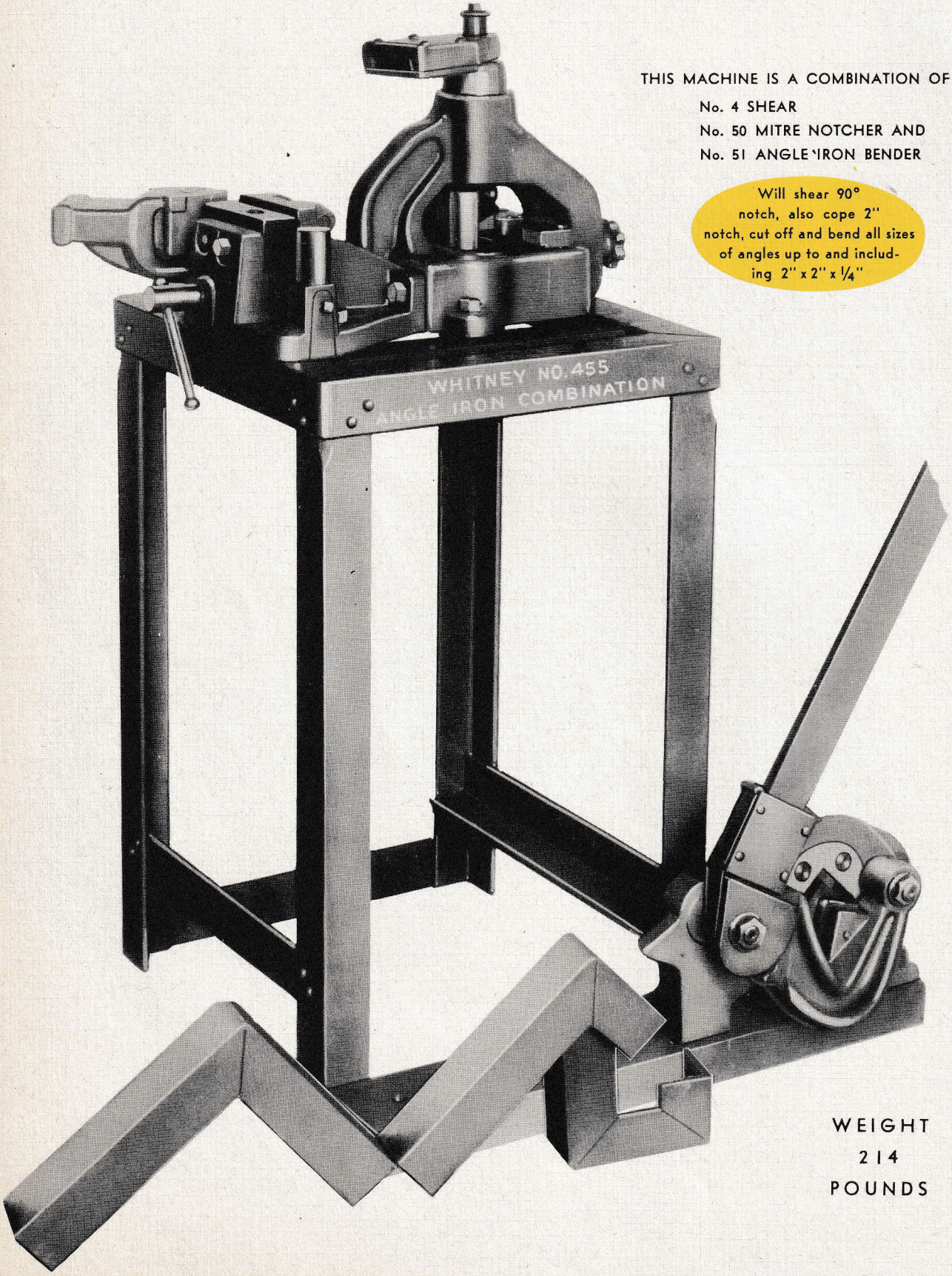

THIS MACHINE IS A COMBINATION OF OUR

No. 4 SHEAR
No. 50 MITRE NOTCHER AND
No. 51 ANGLE IRON BENDER

Will shear 90° notch, also cope 2" notch, cut off and bend all sizes of angles up to and including 2" x 2" x 1/4"

WEIGHT
214
POUNDS

NO. 53 UNIVERSAL BENDER

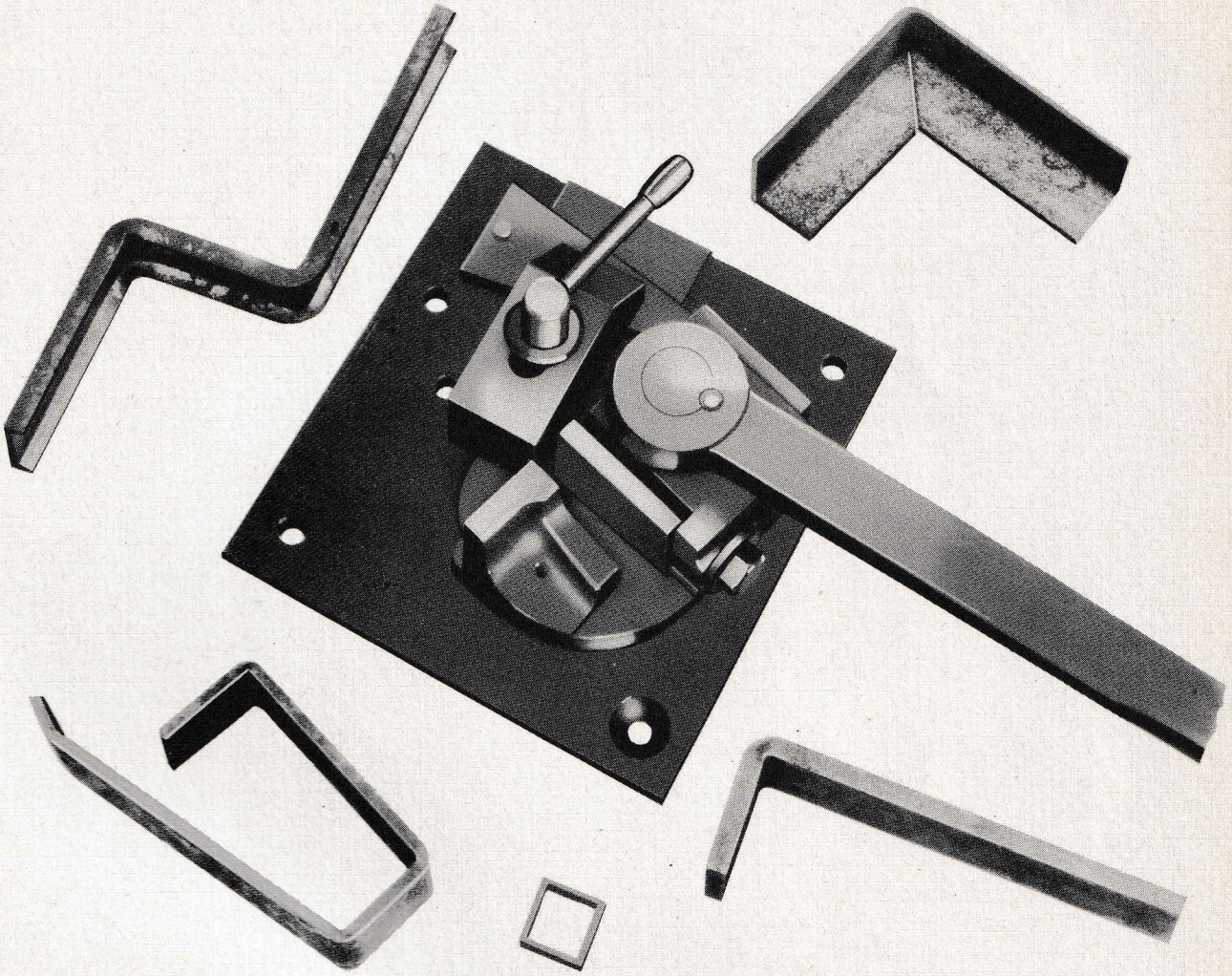

CAPACITY 1/2" x 2-1/4" COMMERCIAL IRON — WEIGHT 60 LBS.

SIZE OF BENDER PROPER 12" x 12" NOT INCLUDING HANDLE

Smallest rectangular shape which can be bent is 2½" x 3"; smallest square shape 3" x 3"; and all sizes of angles up to and including 2½" x 2½" x ⅜".

This bending fixture is very simple to operate. Nothing to get out of order. Has a self-clamping device, eliminating any straightening to be done after the bending has been completed as handles have automatic tension feature.

FEATURES OF SERIES NO. 72 WHITNEY-JENSEN POWER SQUARING SHEARS

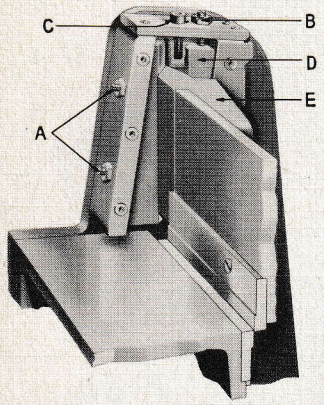

WHITNEY-JENSEN POWER SQUARING SHEARS are designed so that the blade adjustment is simple, accurate and positive. The slide is of the flat type which sets in a bracket at a 9 degree angle. By raising or lowering this slide it adjusts the upper blade to or from the lower blade. For example, if you want to set the blades for close clearance, first loosen locking screws "A" and adjusting screw "C" then tighten adjusting screw "B". This will move slide **"D"** down and bring the upper shear blade closer to the lower shear blade. After the desired clearance has been accomplished tighten locking screws "A" and jam nut at "B".

CROSSHEAD is steel fabricated with truss support. Slide bearings (as shown in broken view) are the flat type, cast steel running in cast iron block "D". Part "E" is a steel casting and is adjustable in two directions to and from the lower blade to get proper clearance for shearing.

SHEAR BLADES are inlaid high carbon steel and are furnished as standard equipment. Special shear blades or high speed steel blades can be furnished at an additional charge.

LOWER SHEAR BLADE is adjusted by the means of a tapered wedge, located directly below the lower shear blade. This blade can be moved up or down by loosening the bolts on the wedge and moving the wedge endwise.

SHEAR BLADE SECURITY both the upper and lower shear blades are held securely to a solid mass of metal, which will prevent springing. No set screws are used.

TABLE is semi-steel cast normalized, provided with "T" slots for holding gages and extended arm supports for holding gages.

HOLDOWN is the spring plunger type, entirely concealed.

BACKGAGE is assembled to the crosshead and can be arranged in a parallel position as well as at an angle in relation to the shear blades.

HOUSINGS are steel fabricated and are securely dowled to the bed plate.

CONNECTING RODS are fabricated of steel with bronze bushings.

CLUTCH is plunger pin type, three contact, heat treated bushing pressed into flywheel to receive recoil pin wear. Generous wearing surface on recoil pin.

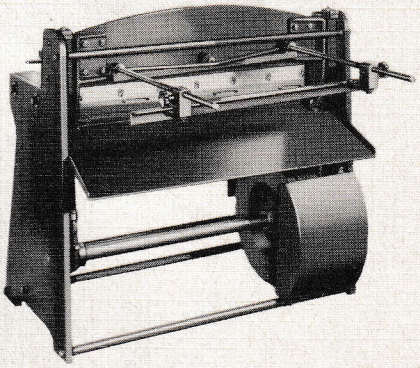

SPECIFICATIONS

	NO. 7236	NO. 7242	GEARED NO. BG-7242
Capacity — Mild Steel	16 Gauge	16 Gauge	14 Gauge
Cutting Length	36 Inches	42 Inches	42 Inches
Length of Knives	37 Inches	43 Inches	43 Inches
Back Gauge Range — Maximum	31 Inches	31 Inches	31 Inches
Front Gauge Range — Maximum	31 Inches	31 Inches	31 Inches
Table Size	14" x 43"	14" x 49"	14" x 49"
Flywheel Diameter and Face	18" x 5"	18" x 5"	16" x 4"
Flywheel Weight	250 Lbs.	250 Lbs.	160 Lbs.
Flywheel Speed	180 R.P.M.	180 R.P.M.	425 R.P.M.
Strokes per Minute	180	180	85
Lower Shaft Diameter	1¾ Inches	1¾ Inches	1¾ Inches (2)
Ratio of Gearing	Direct	Direct	5 to 1
Opening			
Motor H.P.	2	2	2
Motor Phase	3	3	3
Motor Voltage	220-440	220-440	220-440
Speed of Motor	1200 R.P.M.	1200 R.P.M.	1800 R.P.M.
V-Belt B Section — No. Required	3	3	3
Floor Space, Front to Back x R to Left	24" x 45"	24" x 51"	30" x 51"
Without Front Bracket or Back Gauge			
With Front Bracket or Back Gauge	62" x 45"	62" x 51"	68" x 51"
Height Overall	42 Inches	42 Inches	42 Inches
Net Weight	1300 Lbs.	1450 Lbs.	1700 Lbs.
Approximate Shipping Weight	1400 Lbs.	1550 Lbs.	1800 Lbs.

WHITNEY-JENSEN POWER SQUARING SHEARS

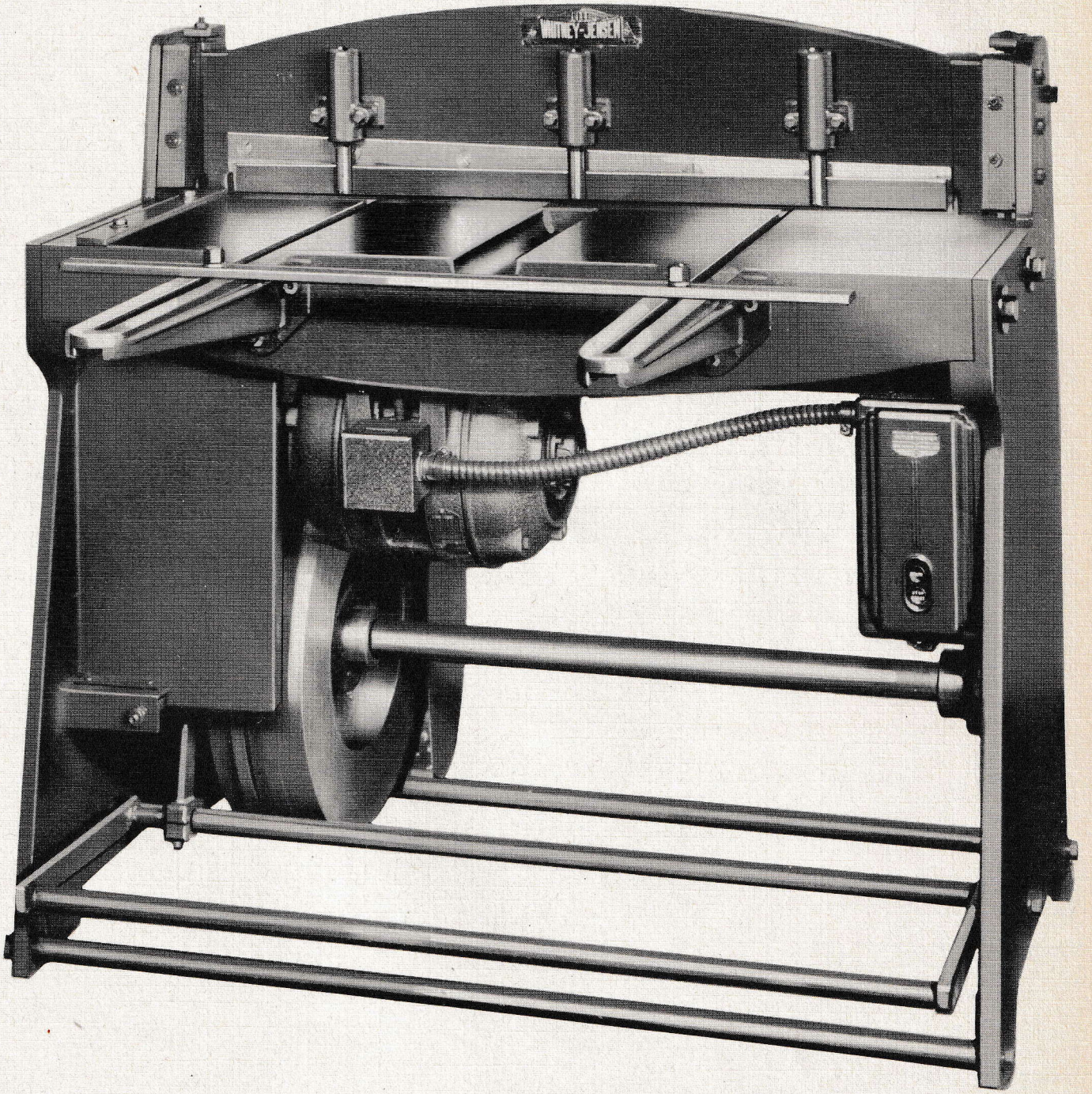

THE WHITNEY-JENSEN Series No. 72 Power Squaring Shears are made in 36 inch and 42 inch cutting lengths, 14 and 16 gauge capacities. The adjustment is simple, accurate and positive.

QUICK IN ACTION . . EASY TO OPERATE . . COMPACT IN SIZE

POWERFUL • ACCURATE • DURABLE

This is not the ordinary Foot Press, but a toggle action: no kick or violent force necessary: only foot pressure to create a 3½ ton pressure per square inch.

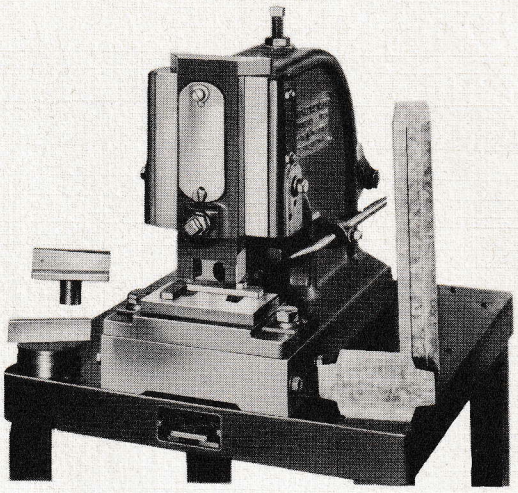

This special notching punch and die, designed to be used in any of our standard toggle action Foot Presses, will reduce the cost of making drive cleats or "drive slips," as they are sometimes called. A time study shows that the cost of a No. 28 Foot Press, equipped with a notching punch and die, can be earned by a savings in the first 12 hours of use.

SPECIFICATIONS

	No. 28	No. 29
Capacity	2" Hole in 16 Gauge	2" Hole in 16 Gauge
Stroke of Ram	1"	1"
Ram Adjustment	¾"	¾"
Punch Hole in Ram	1"	1"
Depth of Throat	7"	10"
Height of Throat	5¾"	5¾"
Slug Clearance Hole	3" x 5"	3" x 5"
Bed Plate Clamp Holes	6¾"	6¾"
Standard Foot Press Die Shoe Shank	1" Diameter x 1¼" Length	1" Diameter x 1¼" Length
Net Weight	345 Lbs.	385 Lbs.
Shipping Weight	385 Lbs.	430 Lbs.

NOS. 28 AND 29 TOGGLE ACTION FOOT PRESSES

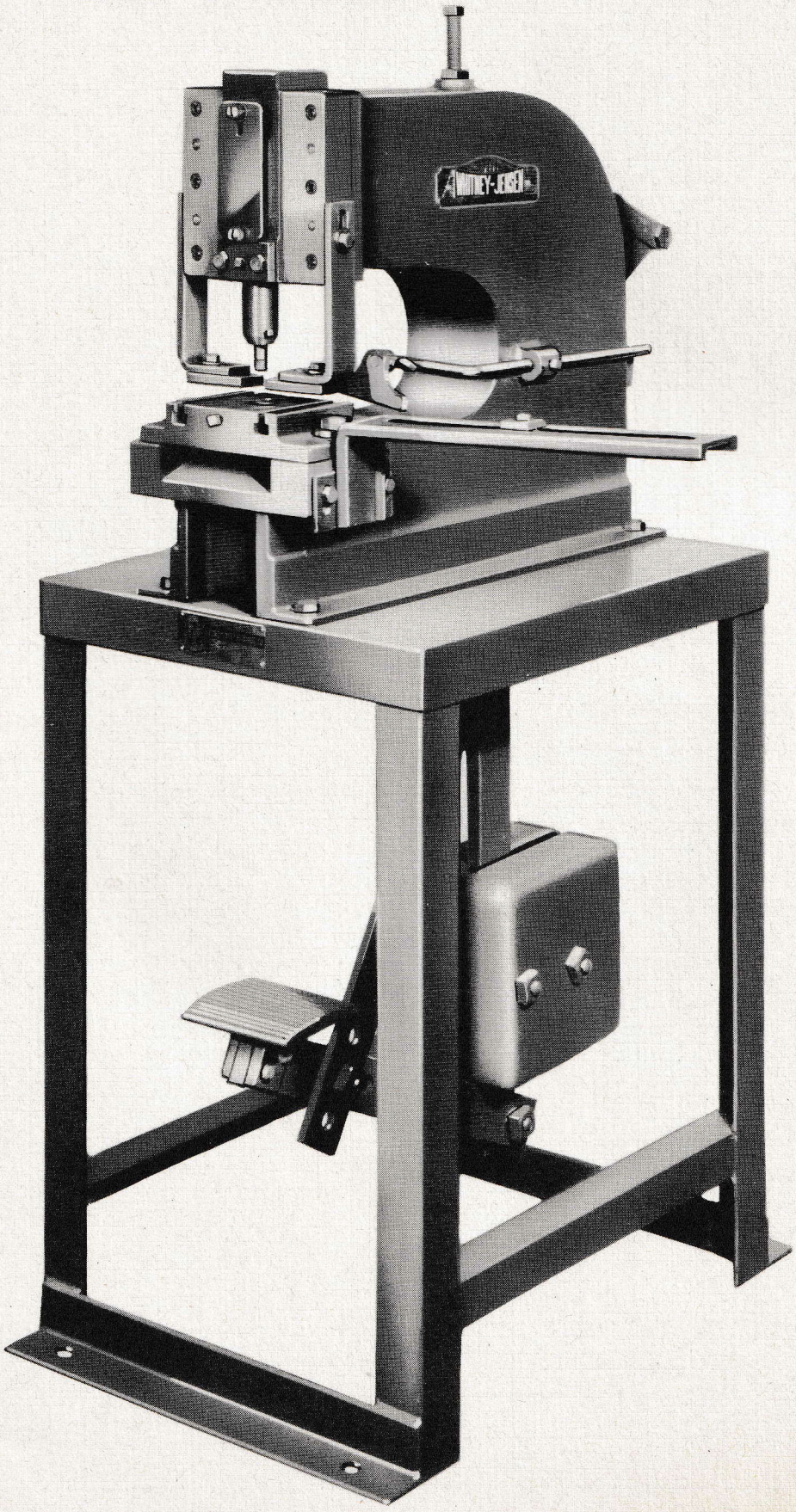

BE SURE TO STATE SHANK DIAMETER OF PUNCH AND O. D. OF DIE WHEN ORDERING PUNCHES AND DIES.

NOS. 58 AND 68 DEEP THROAT TOGGLE ACTION FOOT PRESSES

SPECIAL PUNCHES AND DIES
Which Can Be Furnished for Any Type Whitney-JENSEN Foot Press

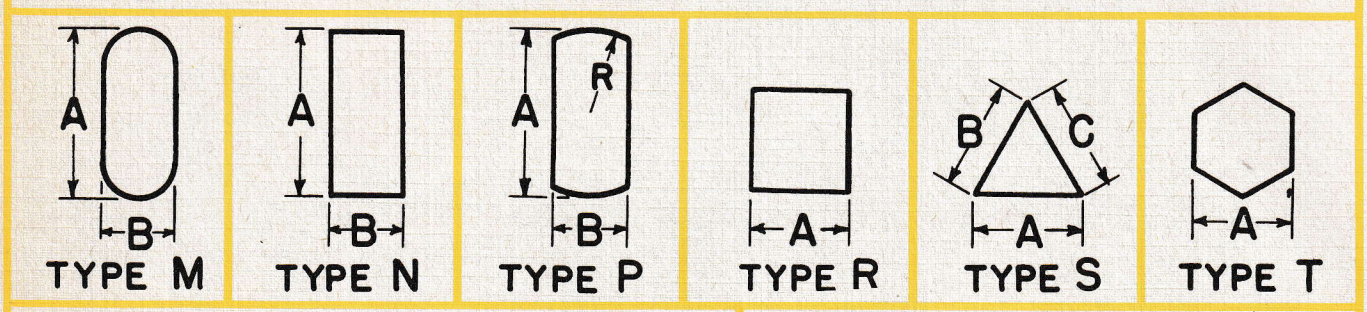

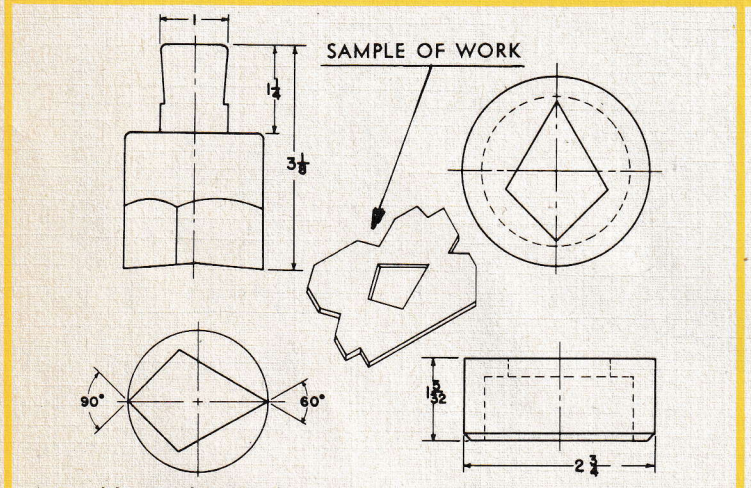

Double Angle Notching Punch and Die. Note combination of angles shown on sample

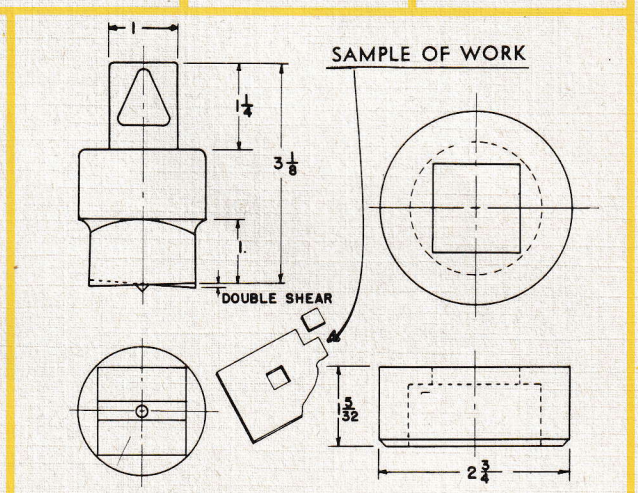

Corner Trimming or Piercing Square Holes Punch and Die

SPECIFICATIONS

	No. 58	No. 68
Capacity	2" Hole in 16 Gauge	2" Hole in 16 Gauge
Stroke of Ram	1"	1"
Ram Adjustment	3/4"	3/4"
Punch Hole in Ram	1"	1"
Depth of Throat	18"	24"
Height of Throat	5 3/4"	5 3/4"
Slug Clearance Hole	3" x 5"	3" x 5"
Bed Plate Clamp Holes	6 3/4"	6 3/4"
Standard Foot Press Die Shoe Shoe Shank	1" Diameter x 1 1/4" Long	1" Diameter x 1 1/4" Long
Net Weight	490 Lbs.	533 Lbs.
Shipping Weight	525 Lbs.	585 Lbs.

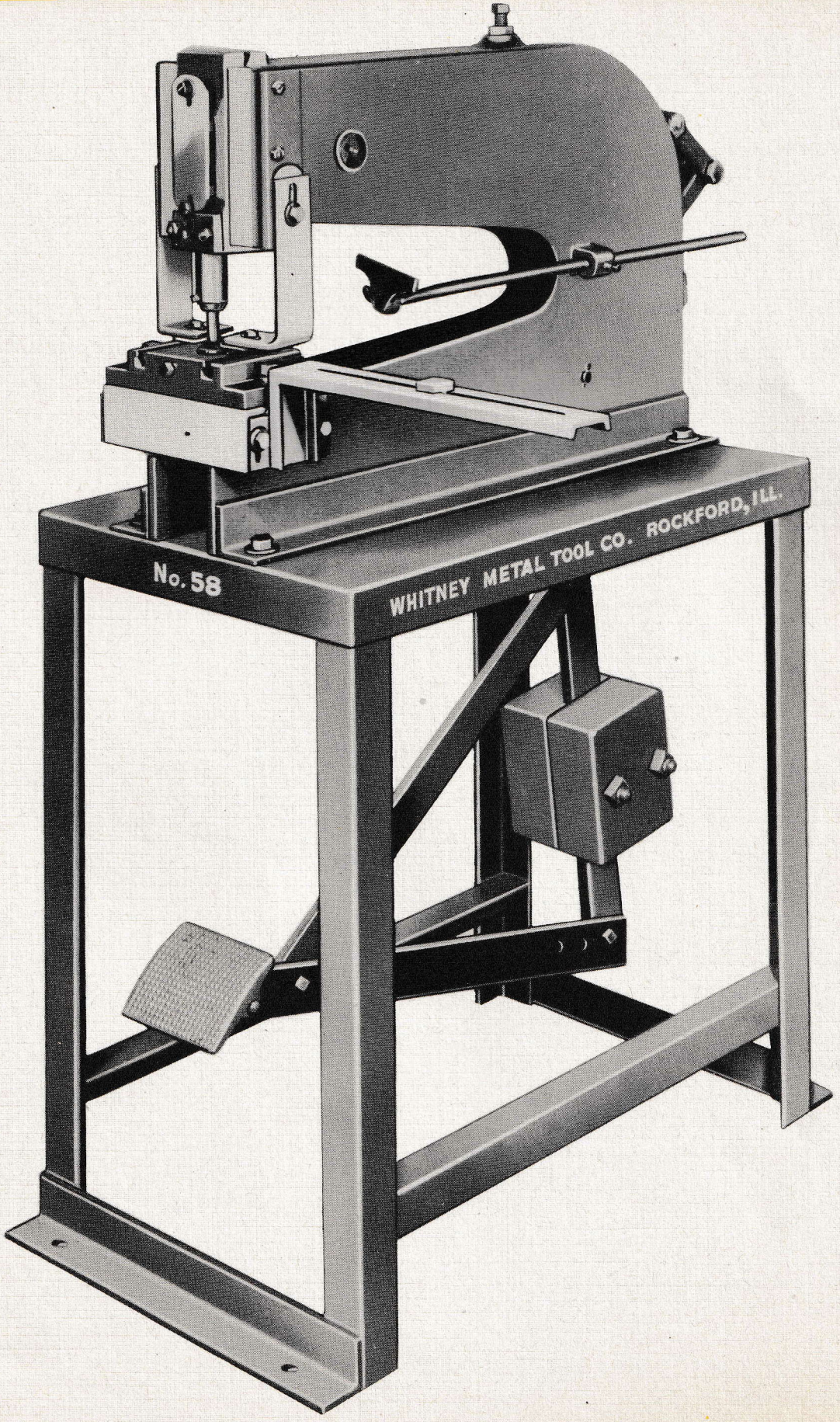

BE SURE TO STATE SHANK DIAMETER OF PUNCH AND O. D. OF DIE WHEN ORDERING PUNCHES AND DIES.

CONSTRUCTION

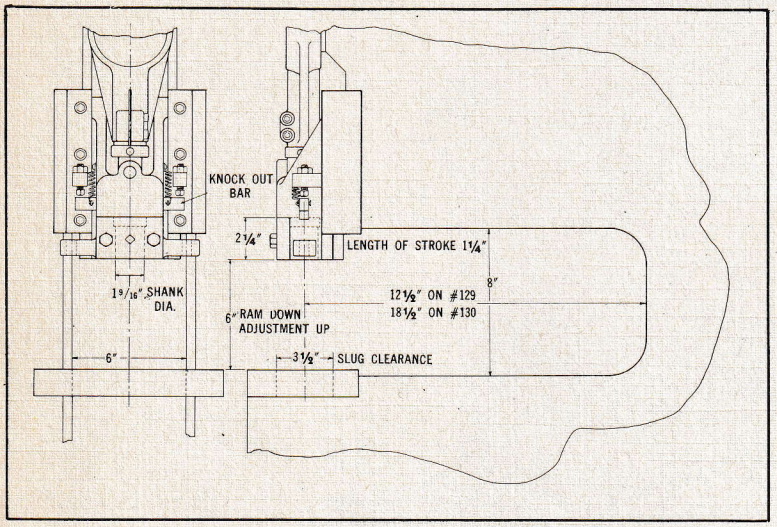

Built of steel plates, welded box type design; safety factor of frame is over 100% of its greatest capacity. Punch comes equipped with a Polyphase Motor, V Belt Drive, Three Station Clutch Pins in Fly Wheel, Adjustable Brake Shoe on Main Shaft, Safety Device when changing punches and dies to prevent ram from descending. Fly wheel is at rear of machine so as not to interfere with work. No clutch pins ringing in ears of operator.

Our experience in making fine Metal Working Tools for over a Quarter of a Century is embodied in the designing and building of this Punch.

SPECIFICATIONS

	No. 129	No. 130
Capacity	10 ton	10 ton
Size of Main Shaft SAE Steel	1-3/4"	1-3/4"
Length of Stroke	1-1/4"	1-1/4"
Punch Hole in Ram	1-9/16"	1-9/16"
Length of Ram	7-1/2"	7-1/2"
Width of Ram	5-1/2"	5-1/2"
Stroke Adjustment	1-3/4"	1-3/4"
Depth of Throat	12"	18"
Die Space with Stroke Down, Adjustment Up	6"	6"
Size of Bolster Plate	1-1/4" x 6 x 12"	1-1/4" x 6 x 12"
Slug Hole Clearance	6 x 3-1/2"	6 x 3-1/2"
Bed Plate Holes Center to Center	10"	10"
Size of Fly Wheel	20"	20"
Weight of Fly Wheel	150 Lbs.	150 Lbs.
Speed of Fly Wheel	175	175
Height from Floor to Center of Shaft	52"	52"
Weight	710 Lbs.	1000 Lbs.

Polyphase motor, 1 H.P., 1200 R.P.M., 60 cycle 220 volt, type Q, V belt drive.

NOS. 129 AND 130 POWER PUNCH PRESSES

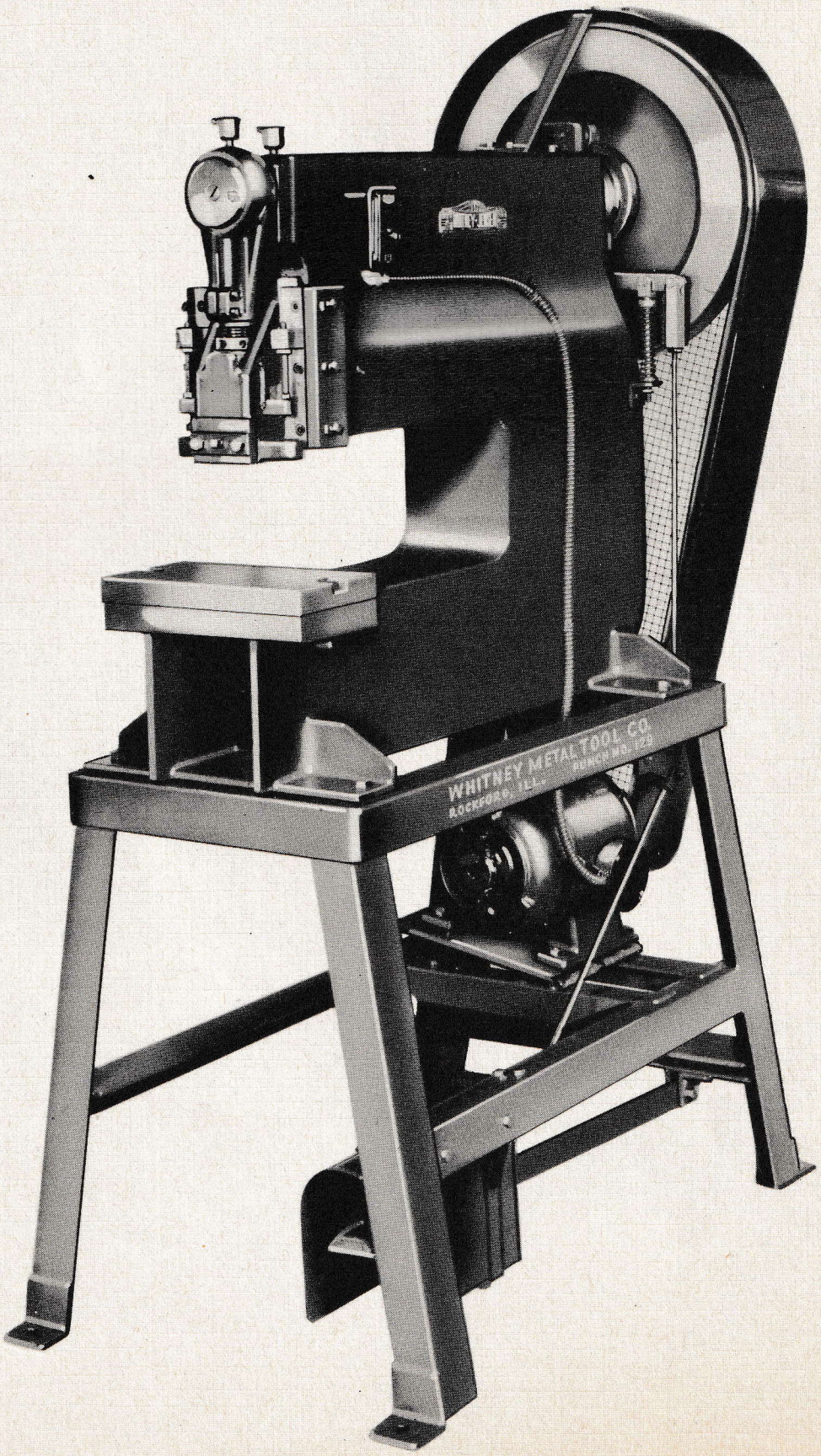

PORTABLE . . . BUT STURDY

The "Air Conditioning Special" is a PORTABLE Brake, weighing only 265 pounds (Bench Model). It is also available in a COMBINATION Type, suitable for box and pan bending as well as all kinds of straight bending.

The frame of the Bench type may be bolted to a bench through the lower angle members, which have extended forefeet to give adequate support for all bending operations or a sub-base frame of angle iron with a tubular tie rod and angle feet to convert the bench model for floor use.

The apron is of welded steel plate construction with a truss stiffener, and is pivoted on hardened and ground steel pins to insure lasting accuracy. Two removable front plates are set into the upper edge to take the principal stress of the bend. By removing one of them reverse bends as short as 3/16" can be made.

SPECIFICATIONS

	Bench Type	Floor Type
Overall Length	61"	61"
Overall Height	20"	43"
Depth, Front to Back	24"	24"
Capacity, Width	49"	49"
Maximum Opening Between Jaws	1⅛"	1¾"
Net Weight, Lbs.	265	290
Approximate Shipping Weight, Lbs.	325	400

WHITNEY-JENSEN
PORTABLE "AIR CONDITIONING SPECIAL"

4 ft., 20 ga. Bending Brake

DESIGNED FOR COMBINATION SERVICE

This Brake is designed for box and pan bending, as well as all types of straight bending, the change over from one to the other being accomplished quickly, easily, and accurately. By loosening two clamp nuts at each end, the upper jaw may be cammed up into the correct position to receive the movable box fingers which are clamped to the front edge. The upper jaw assembly is carried on four studs in guiding slots with locating offsets which permit rapid positioning for either service.

CONSTRUCTION FEATURES

The upper and lower jaws, and the bending apron, are of welded steel plate construction with angle and truss stiffeners. This construction has proved eminently satisfactory on the hundreds of Whitney-JENSEN Brakes now in use, as it provides an ideal combination of lightness, accuracy and durability. The lower jaw is fixed and clamping of the work is accomplished by moving the upper jaw down to it by two counter-weighted levers working through toggle connections which are adjustable for thickness of material. Hardened and ground apron and toggle pins are used. All parts are accurately machined and carefully assembled.

SPECIFICATIONS

SIZE	FEET	INCH	CAPACITY	APPROXIMATE SHIPPING WEIGHT
18-5	5	1	18	1015 lbs.
18-6	6	1	18	1090 lbs.
18-8	8	1	18	1550 lbs.
18-10	10	1	18	1940 lbs.

Box Fingers are made in multiples from 2 inches to 6 inches by 1/2" variation and 8" in width,, 6" depth.

WHITNEY-JENSEN
18 GAUGE COMBINATION BENDING BRAKE

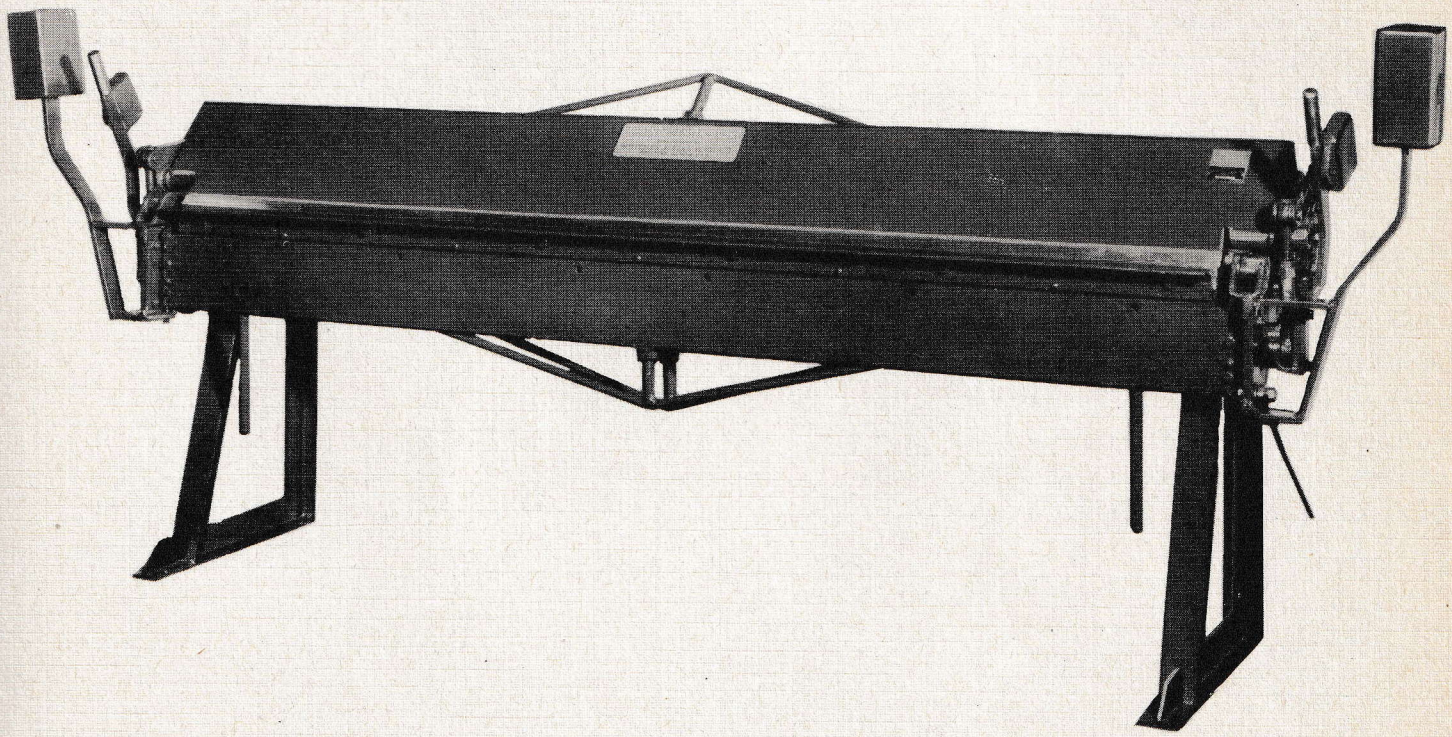

EASY ACCURATE...STRAIGHT BOX AND PAN BENDING

The Whitney-JENSEN Brake is a combination machine, adaptable to all kinds of straight, box, and pan bending and including certain types of taper and conical work. In designing our steel bending brakes we have given primary consideration to three things: First, increased strength, durability, and stiffness, with all possible reduction in weight. Second, use of all the latest improvements of proved real value, without complicating the design. Third, ease of operation and increased range of work. Ask your local dealer if there is somebody in your vicinity who has a Whitney-JENSEN Brake. See it work! Compare it with others!

EXTRA LARGE CAPACITY FOR ALL TYPES OF WORK

One of the most practical features of the Whitney-JENSEN Brake is the great range and variety of adjustments which can be made quickly, easily, and accurately for proper handling of all kinds of work. The clamping handles on the lower rail enable the operator to obtain exactly the force of grip required by the conditions of the work. The upper bending jaw can be set for a maximum clearance ranging from 2" to 4", can be moved forward and back through a distance of 8", and can be set at an angle of as much as 10° with the bending apron. All adjustments are quickly made and can be positively locked once they have been set. Compare these features with other brakes!

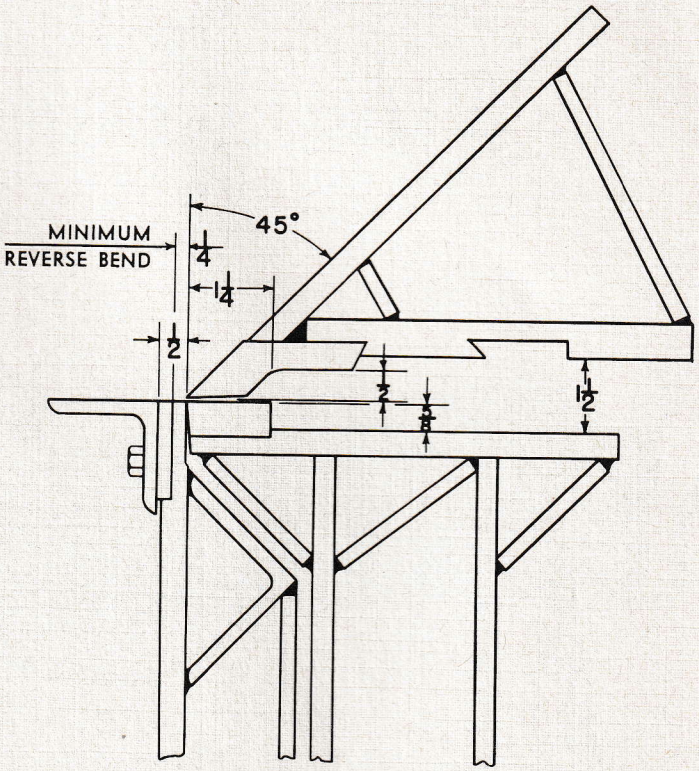

A cross-section of the bending jaws and apron, showing the rigid box-section welded steel plate construction.

SPECIFICATIONS

SIZE	FEET	INCH	CAPACITY	APPROXIMATE SHIPPING WEIGHT
16-4	4	1	16	1300
16-5	5	1	16	1400
16-6	6	1	16	1900
16-8	8	1	16	2520
16-10	10	1	16	3300
14-4	4	1	14	1410
14-5	5	1	14	1525
14-6	6	1	14	2070
14-8	8	1	14	2675
14-10	10	1	14	3485
12-4	4	1	12	1800
12-5	5	1	12	2000
12-6	6	1	12	2600
12-8	8	1	12	3850
12-10	10	1	12	5200

Box Fingers are made in Multiples from 2 inches to 6 inches by ½ inch variation and 8" in width, 6" depth.

WHITNEY-JENSEN COMBINATION ROLLER BEARING, BENDING AND BOX BRAKE

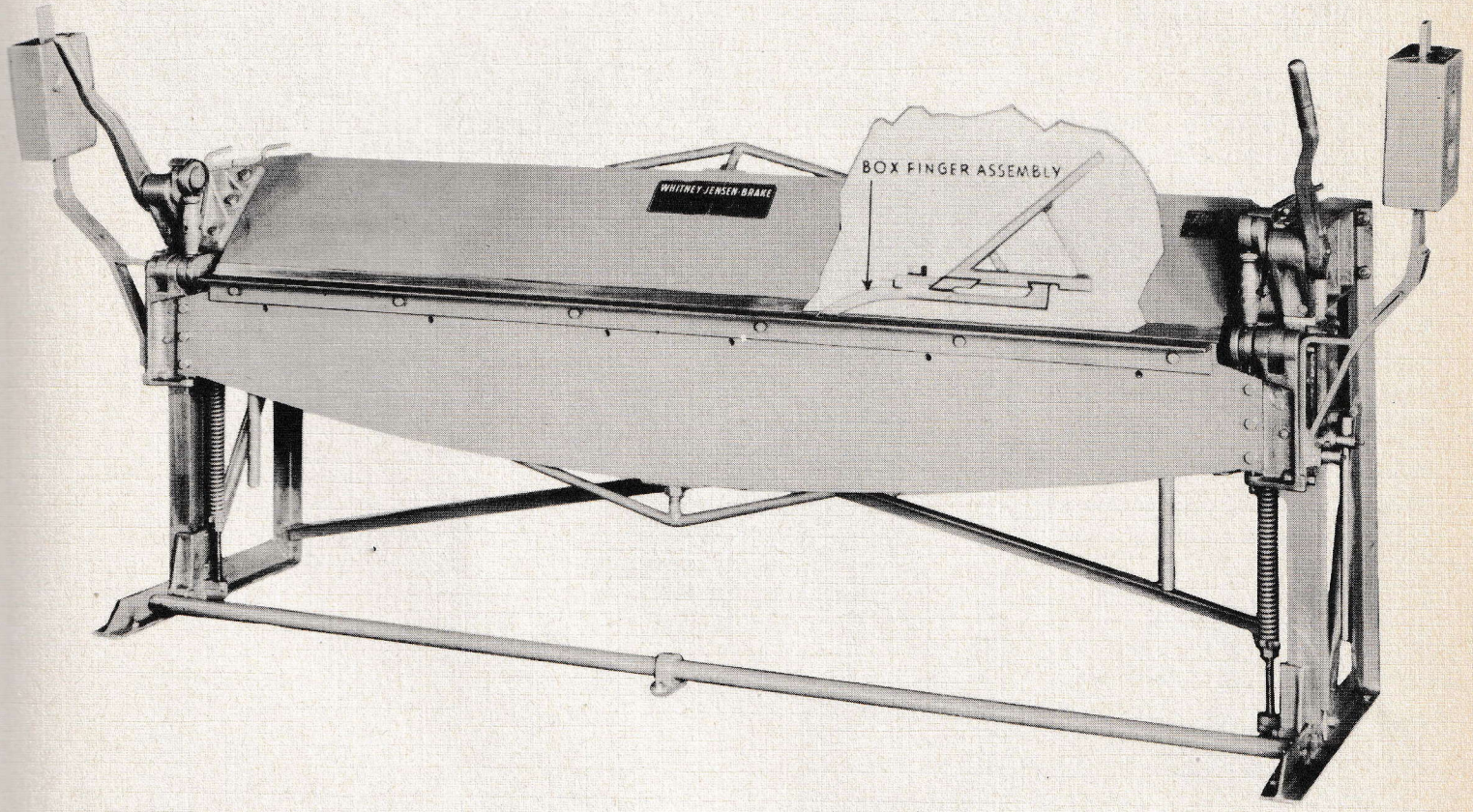

"40% FASTER 20% EASIER"

WITH THE TORRINGTON NEEDLE BEARING

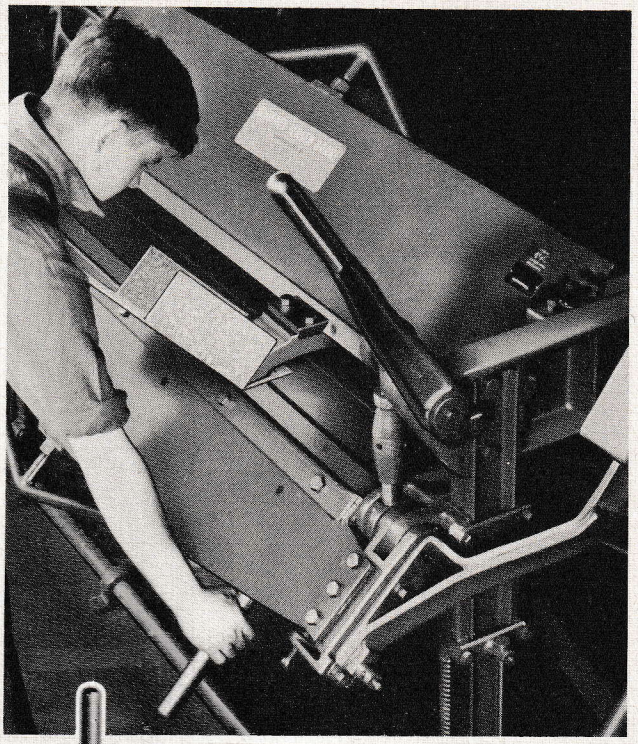

The Whitney-JENSEN combination bending brake in use. Torrington Needle Bearings have increased the ease and speed of operation.

Torrington Needle Bearings are standard equipment now on all Whitney-JENSEN combination bending brakes — because experience has proved that their operation is far faster and easier when Needle Bearings are used.

We have tested the Needle Bearing in comparison with bushings on apron supports and eccentric shafts. Here's what our engineers report:

"The force necessary to swing the apron when making a bend was decreased by 12 to 14%. The force necessary to release

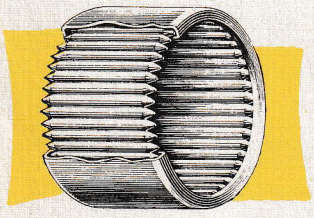

the clamping handle from the over-center position was decreased by 90%."

Our customers were quick to appreciate the advantages of the Needle Bearing. One customer reports that his production has been doubled by the Needle-Bearing-equipped brakes.

The Needle Bearing brake is 40% faster than the same brake equipped with plain bearings and is 20% easier on the operator."

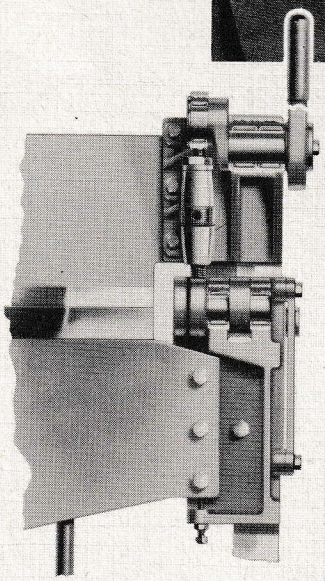

View showing the location of the Torrington Needle Bearings on the bending brake. Note simplicity of housing design.

Box or pan bending with the Whitney-JENSEN Combination Brake. The operator is using one of the quickly-attachable fingers to fold up one side of a small box. These fingers — available in a variety of widths — may be attached to the upper jaw in a matter of seconds and can be quickly and solidly set wherever required. This feature increases the range of work possible on this one machine literally a thousand-fold!

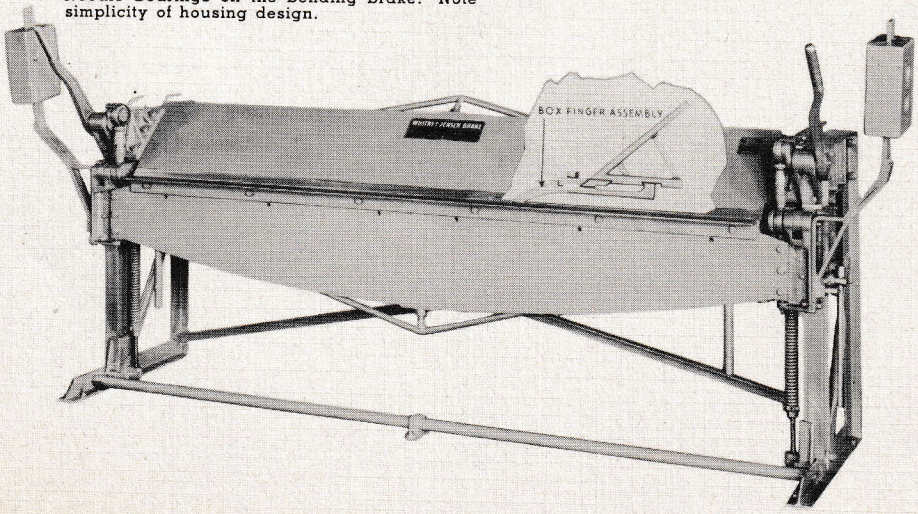

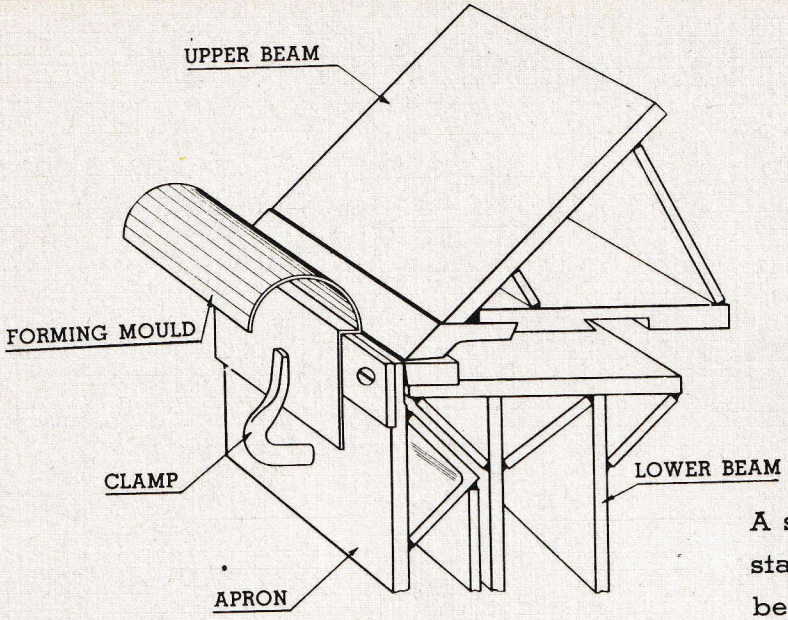

STANDARD FORMING MOULDS

A set of forming moulds consisting of five standard sizes 5/8", 1 5/8", 2 1/4", and 3" can be furnished. These moulds are easily installed by removing the angle iron support on the apron which is held in place by six screws. Then rest the mould on the apron jaw using the clamps which fasten through the holes in the apron to hold the mould secure.

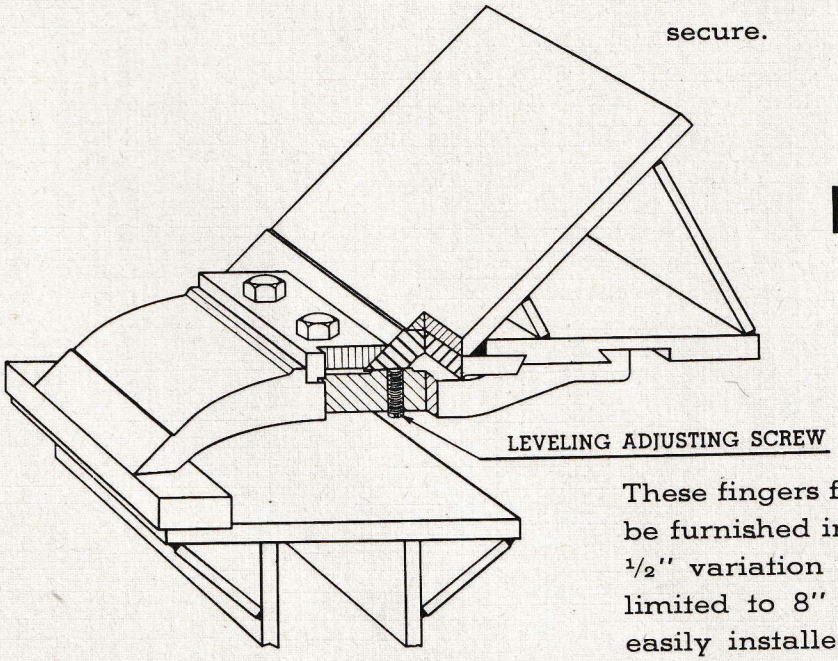

A sectional view of the box finger assembly, showing the quick and easy method of attachment.

BOX FINGERS

These fingers for box and pan bending can be furnished in multiples from 2" to 8" by 1/2" variation and 6" deep. This brake is limited to 8" depth fingers. Fingers are easily installed after changing the brake over to box and pan bending. Attach the finger to the upper beam as shown at right, push the finger back and hook into the dovetail, then tighten the hexagon nut that clamps the finger to the jaw. This feature increases the range of work possible on this one machine literally a thousand fold.

SPECIAL FORMING MOULDS

Small Radius Former

MANY SPECIAL ATTACHMENTS CAN BE FURNISHED FOR WHITNEY-JENSEN BRAKES

Send us the details of your work and we will be glad to send you our recommendations

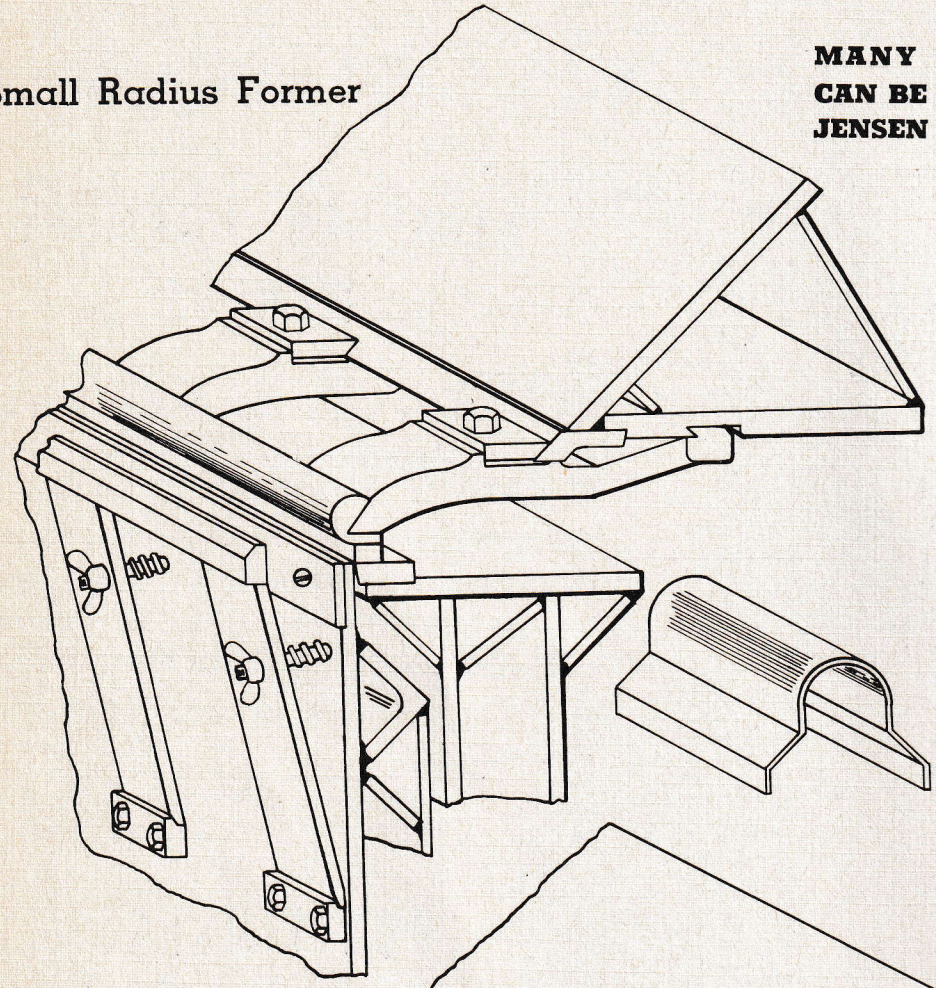

Large Radius Former

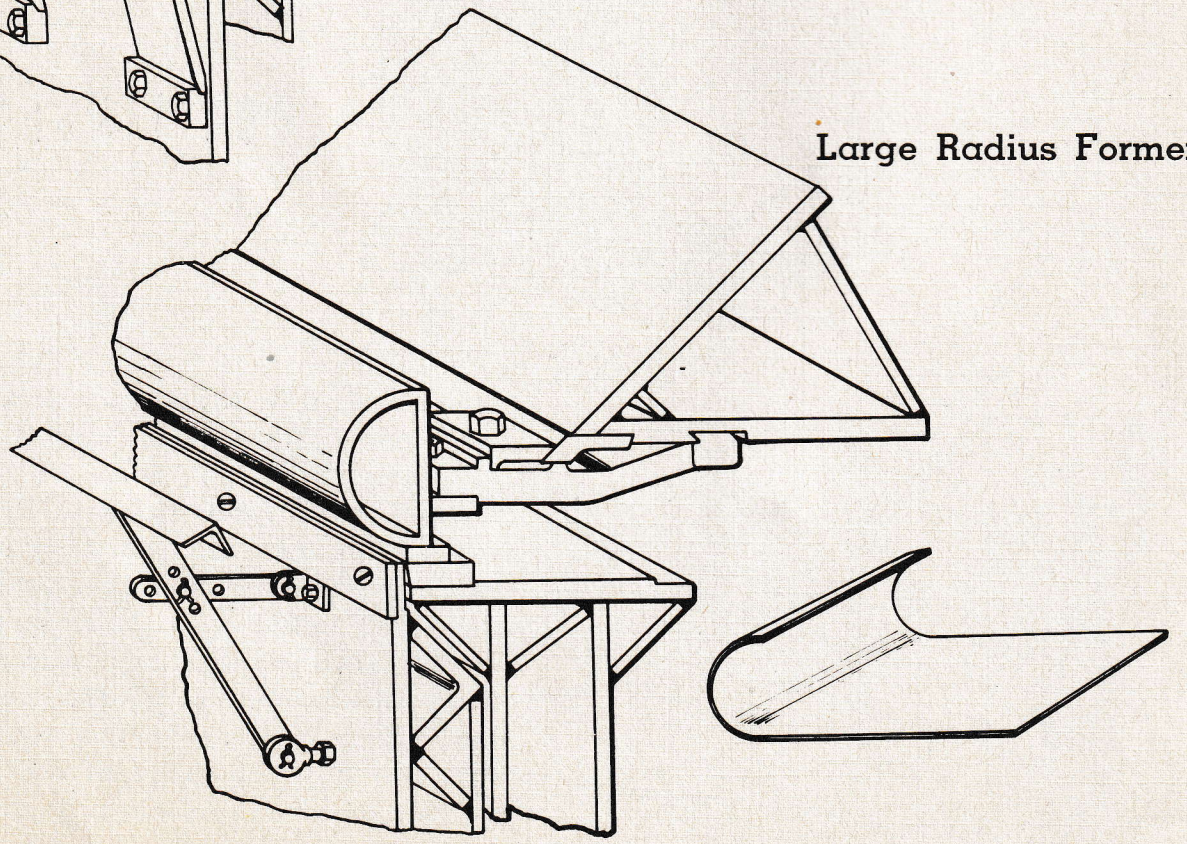

SPECIAL FORMING MOULDS

Special Beading Former

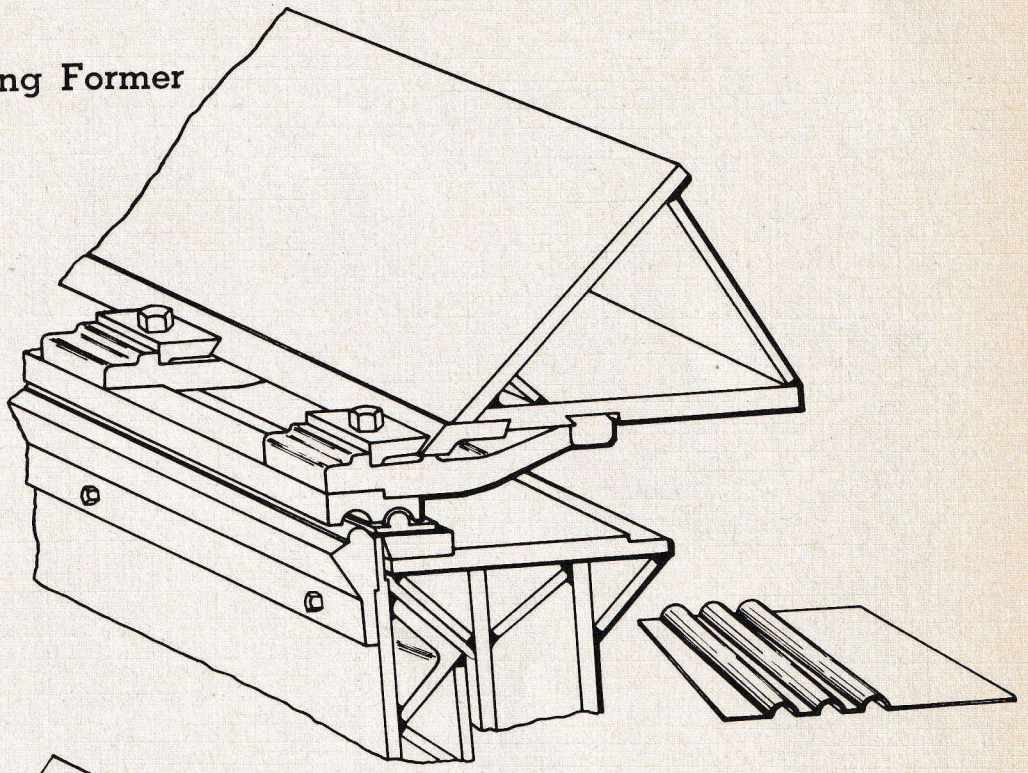

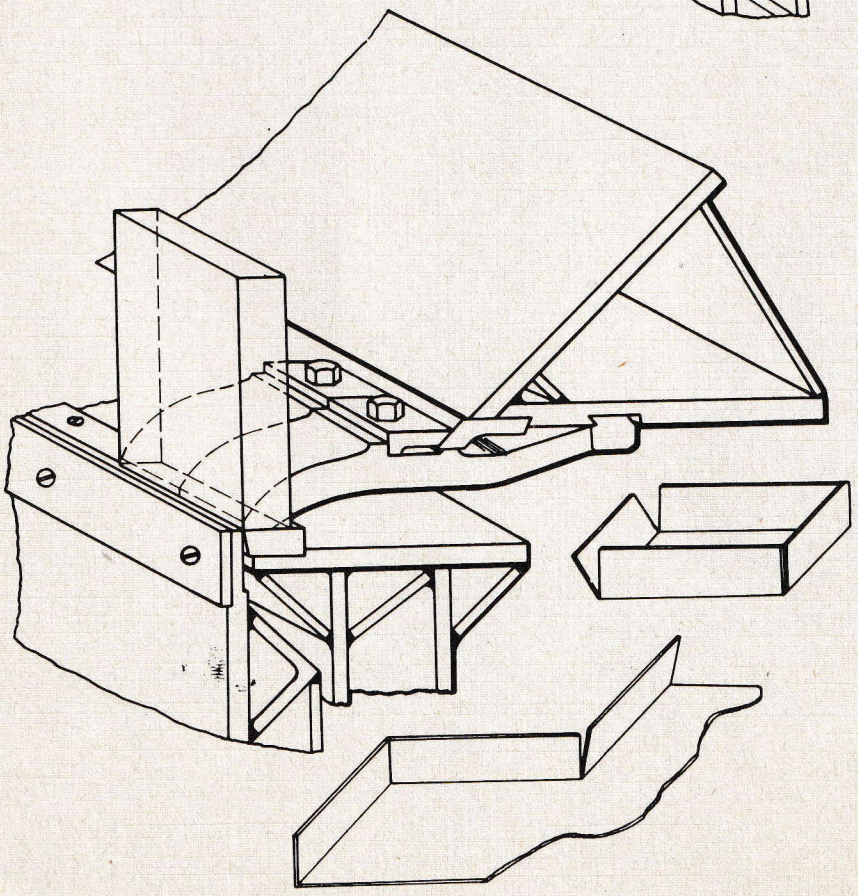

Standard Fingers

SPECIAL FORMING MOULDS

Internal Bend Former

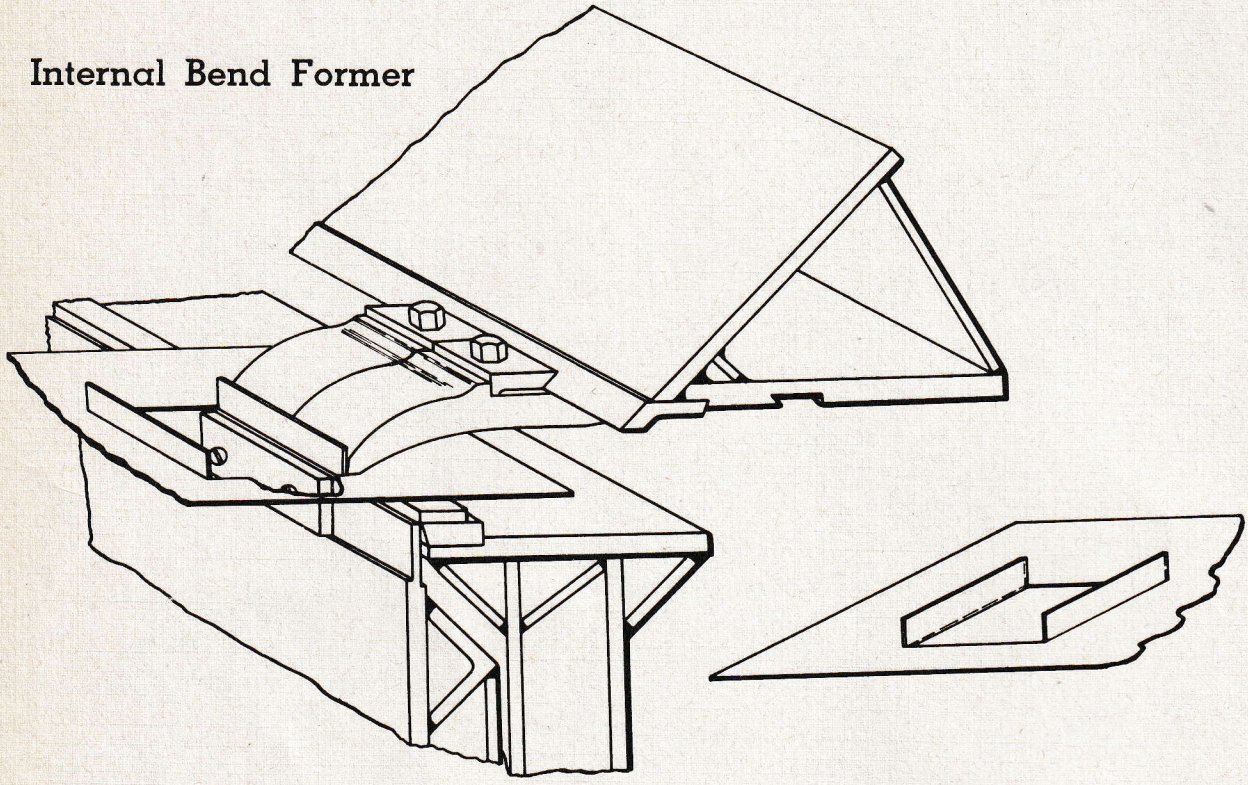

Internal Bend Former

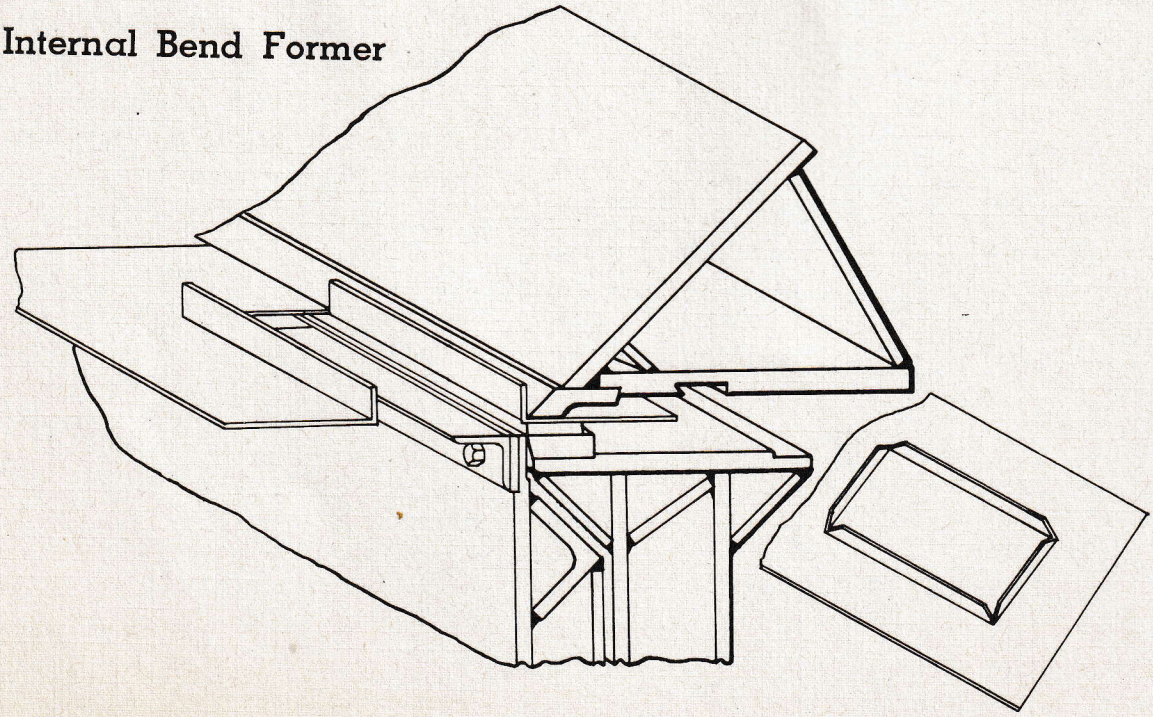

THE *Whitney* JENSEN *Brake*

DISTINGUISHING FEATURES

NOT FOUND ON OTHER STEEL BENDING BRAKES

★ On the Whitney-JENSEN Combination Brake the upper jaw is *fixed*, and the lower jaw moves UP to it. This unique and exclusive straight-line action completely eliminates any tendency for the work to "creep" during clamping and permits greater speed and better accuracy. A second clamping is unnecessary.

★ The movable lower jaw is accurately counterbalanced by two adjustable compression springs. With this exclusive feature, the jaw can be opened any desired distance — from a fraction of an inch to the extreme opening available — and will remain in whatever position it is set until moved by taking hold of the operating handles. Injury to operator's hands from jaws falling closed is impossible. The normal extreme opening of 2" can be increased by the turnbuckles to 4".

★ Specially designed, hand-operated turnbuckles permit easy and accurate adjustments of the exact pressure required for holding work firmly between the jaws. This is especially important in order to obtain straight line work, particularly on stainless steel. The turnbuckles provide an extremely simple adjusting means, no wrenches being necessary. Lock nuts are provided for maintaining a fixed pressure on duplicate work.

★ Hardened and ground steel hinge pins support the bending apron, which is accurately counterbalanced for easy movement by conventional counterweights of improved design. A wear strip set into the edge of the apron may be removed for making short reverse bends. For heavy bending an additional front angle support can be quickly attached.

★ The fixed upper jaw may be easily adjusted to a wide variety of positions for different types of bends, curves, and angles. It can be moved back as much as 8" from the bending apron and can be set at an angle of as much as 10°. Accurate markers indicate extreme positions.

★ To permit first-class work on stainless steel, the nose of the upper jaw and the gib plates on the apron are highly polished and heat treated.

★ A lighter, but stiffer and stronger type of construction is used on all Whitney-JENSEN Brakes. The lower rail assembly, the bending apron, and the upper bending jaw are all fabricated of welded steel plates in box sections, reinforced by steel rod trusses. Lasting alignment and extreme rigidity are obtained in this manner.

★ Box fingers specially designed for quick attachment and removal can be provided. A single clamp screw holds each finger firmly and accurately in position (see detail below). A wide variety of finger widths are available from stock.

★ The Whitney-JENSEN Combination Brake is designed throughout to give greatest ease of operation and permit maximum efficiency on all types of work. Hundreds of different kinds of jobs may be done on the one machine, thus requiring only a single investment and a minimum amount of floor space.

WHITNEY-JENSEN BENCH TYPE PRESS BRAKE

New

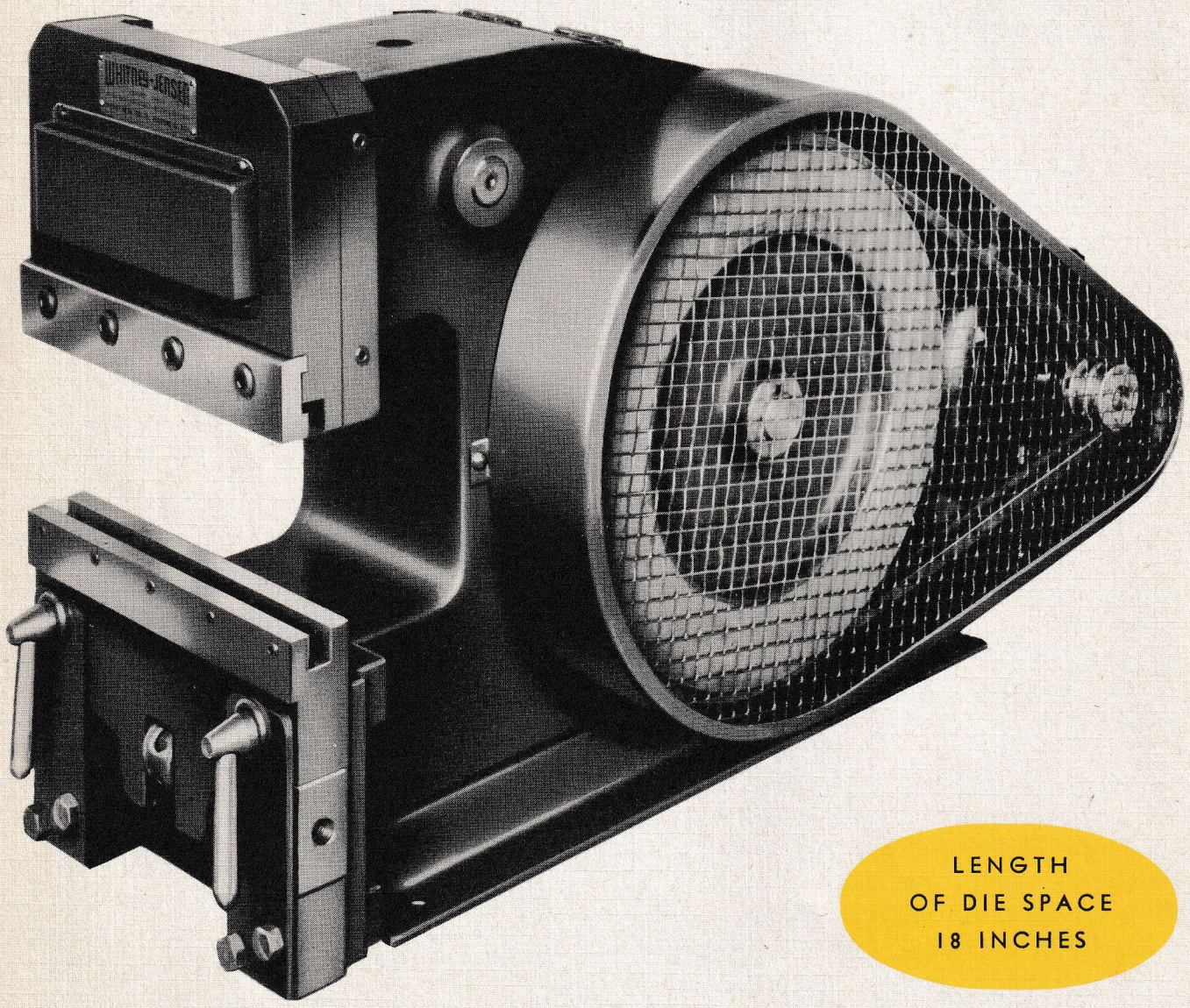

LENGTH
OF DIE SPACE
18 INCHES

This machine was developed to meet the demand for a small Press Brake suitable for moderate-sized work in jobbing and production shops. It is powerful, extremely sturdy, fast, easy to adjust, accurate, and has a number of features which make it one of the most practical machines ever built for bending and forming. It is backed by Whitney's years of experience in the metal working field.

FOR ADDITIONAL INFORMATION PLEASE WRITE US

BACK Cover - INSIDE

BACK COVER-OUTSIDE

Printed in U. S. A.

Whitney-JENSEN

THROATLESS BENCH SHEAR

No. 38

SPECIFICATIONS

Capacity	3/16" Mild Steel
Length of Blade	5"
Length Overall	11"
Height Overall	8¾"
Width Overall	7½"
Weight Net	45 lbs.

WILL SLIT SHEETS AND CUT OFF FLATS — EASILY OPERATED AND DURABLE

WHITNEY METAL TOOL CO.

SINCE 1910

ROCKFORD, ILLINOIS

INSERT A-FRONT

Whitney-JENSEN

BALL BEARING DOUBLE CUT ANGLE IRON SHEAR

No. 162

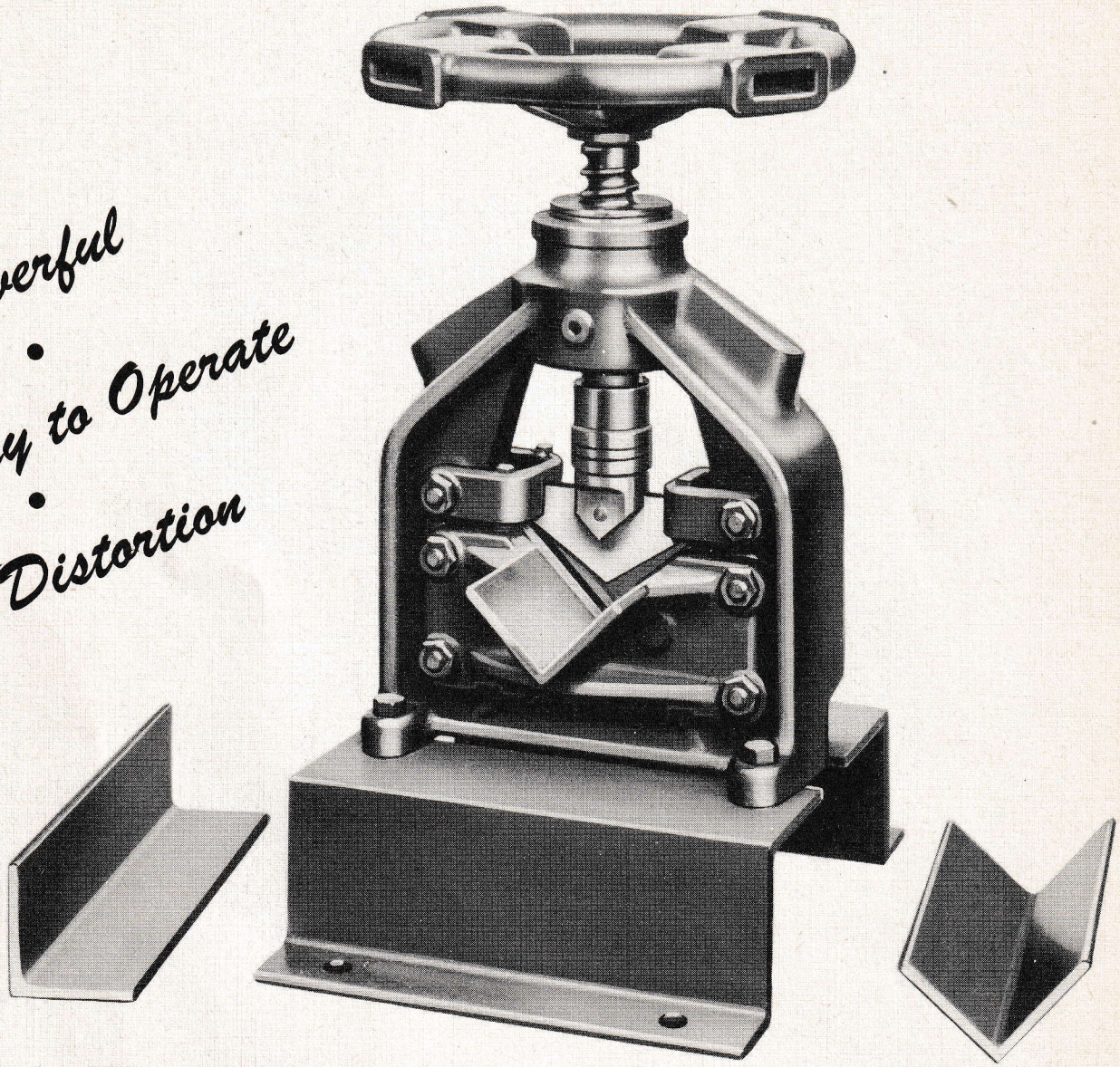

Powerful • Easy to Operate • No Distortion

SPECIFICATIONS

Capacity	3" x 3" x 1/4" Angle Iron
Weight Net	135 lbs.
Height Overall	21"
Width Overall	12"

This shear operates in the same manner as our Ball Bearing Screw Action punches. All sizes of angles thru 3" x 3" x 1/4" can be cut by one man **without** **any** **distortion** of either leg of the angle iron.

WHITNEY METAL TOOL CO.

SINCE 1910

ROCKFORD, ILLINOIS

Printed in U.S.A.

INSERT A-BACK

Whitney-JENSEN PRESS BRAKE
No. 247

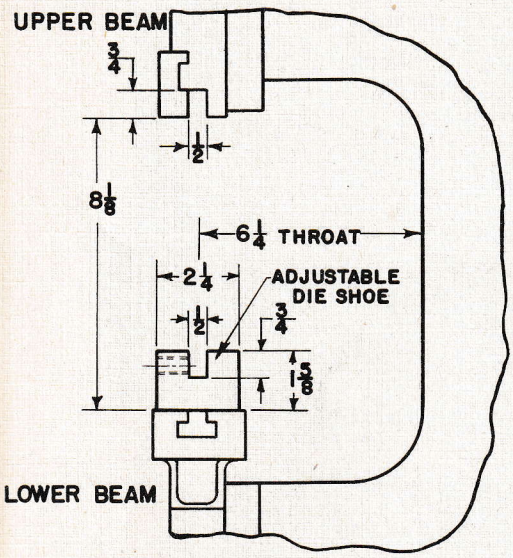

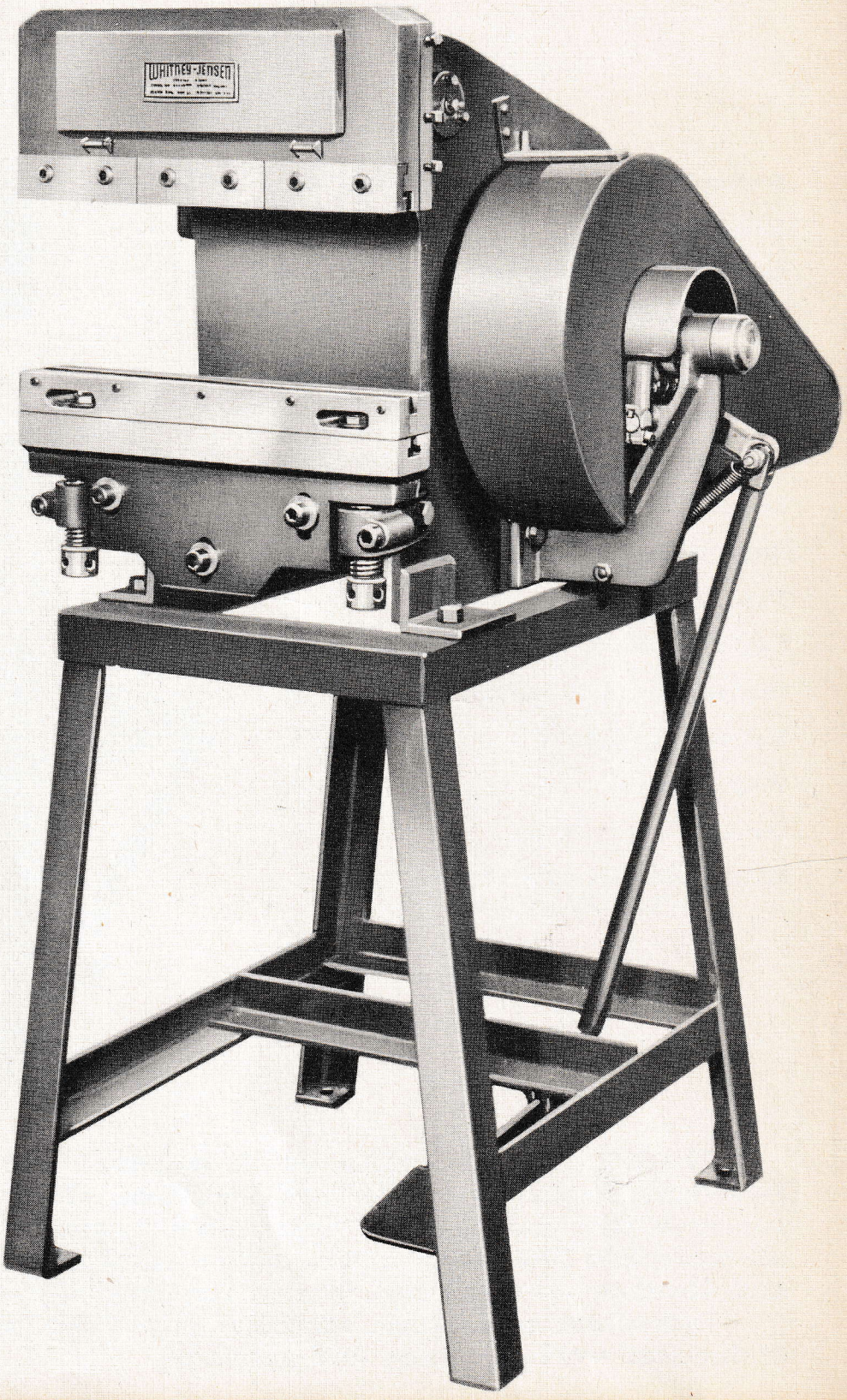

The No. 247 Whitney-Jensen 18" Press Brake was designed originally for the aircraft manufacturers to aid them in expediting small sub assembly angles and channels of various sizes and descriptions.

Previously this work had been done on large press brakes, which in most cases was slow and costly.

This machine is now finding its way into many other industries for small forming operations.

SEE REVERSE SIDE FOR SPECIFICATIONS

A Product of

INSERT B - Front

WHITNEY METAL TOOL CO.

99 Forbes Street, ROCKFORD, ILLINOIS

Specifications

Whitney-JENSEN No. 247 PRESS BRAKE

Bending Capacity, mild steel	14 ga. over 7/8" V-die
Strokes per minute	47
Length of Stroke	1"
Stroke down, adjustment up	5 1/2"
Stroke down, adjustment down	6 1/2"
Adjustment	1"
Die space with die holder removed	7 1/8" to 8 1/8"
Length of die bed	18"
Height of throat	11 1/2"
Throat depth	6 1/4"
Height overall	53"
Front to Back overall, including motor	38"
Right to Left overall	28 1/2"
Weight, Approx.	950 lbs.
Clutch	Dry Disc

Motor, 1 H.P., 1800 R.P.M., 3 Phase, 60 Cycle, 220-440 Volt.

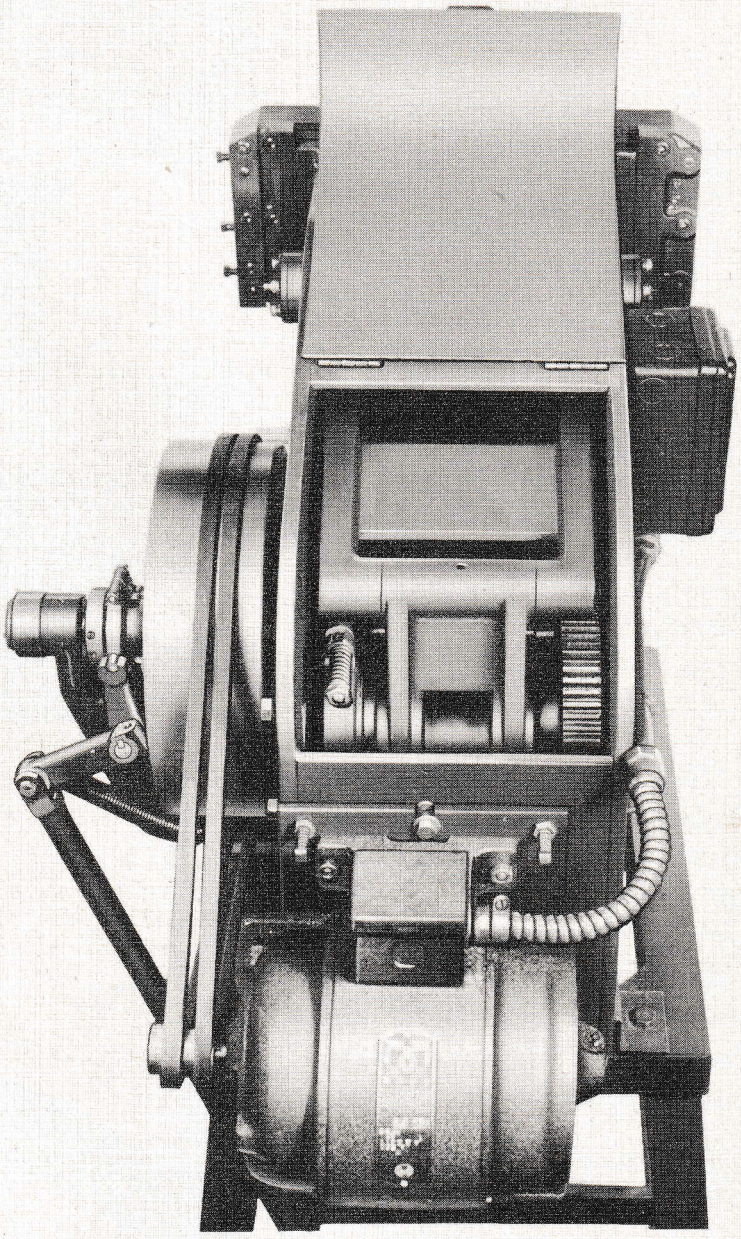

The Whitney-JENSEN No. 247 Press Brake is equipped with a Push Button Reversible Switch, with overload protection. The ram is tripped by the conventional foot treadle at the front of the frame. Motor, flywheel, clutch, and all controlled linkages are mounted on right-hand side of machine. The ram and die shoe are machined for standard die tongues.

Individual adjustment on either side of the lower beam, making leveling of dies and work fast, easy and accurate.

WHITNEY METAL TOOL CO.

SINCE 1910

ROCKFORD, ILLINOIS

INSERT B-BACK

Printed in U.S.A.